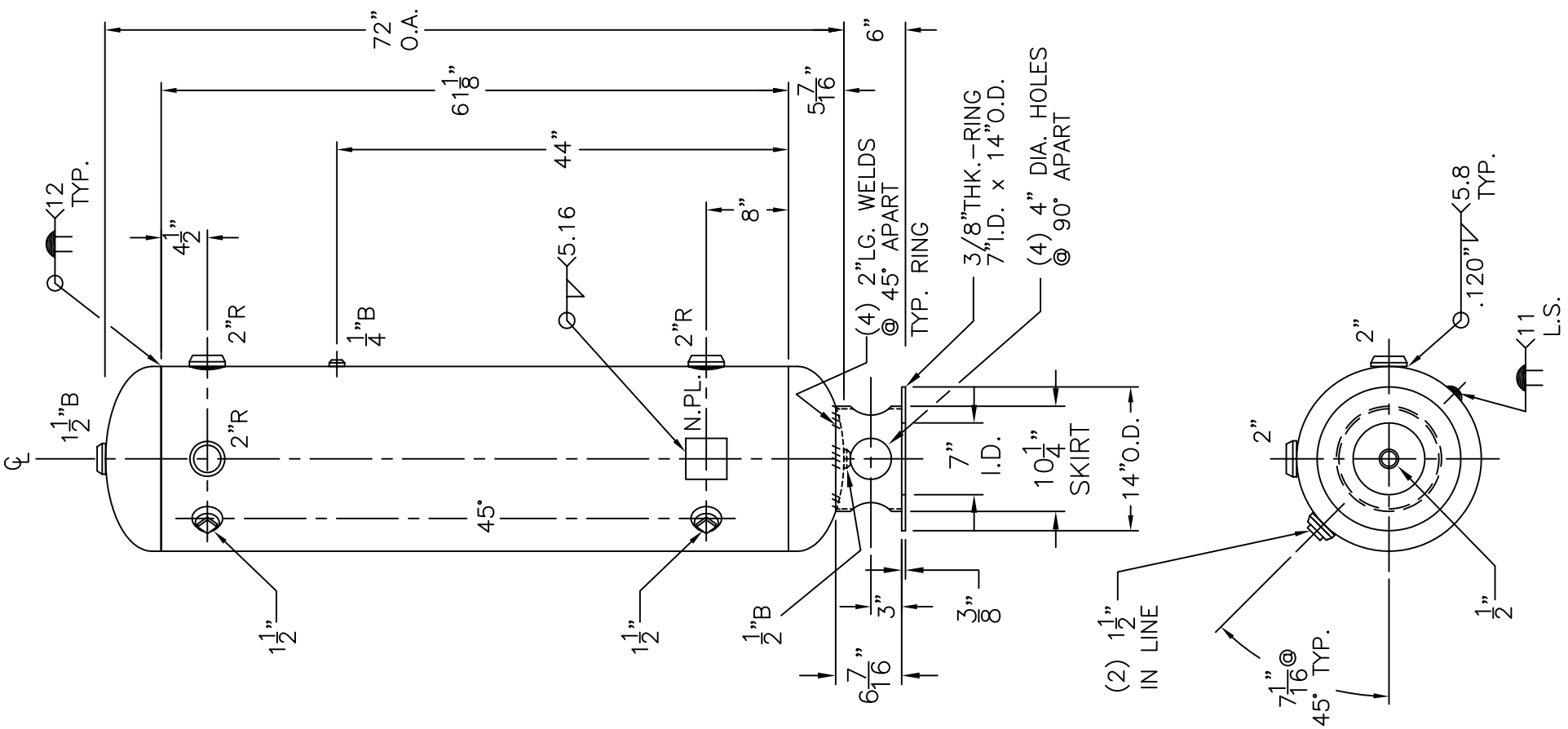


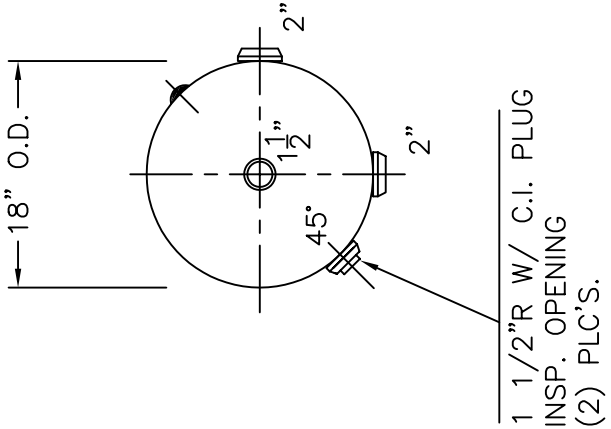


NOTE: 1) HYDRO @ 260 PSIG. MIN.

| | | |
|---|---|---|
| SHELL / HEADS | .156" SA-414-G 2:1 S.E. | |
| | JOGGLE | |
| | | |
| | | |
| | .164" SA-414-G | |
| | | |
| | | |
| M.A.W.P. | 200 PSIG. @ 400 °F | |
| M.D.M.T. | -20 °F @ 200 PSIG. | |
| ASME. SECTION VIII | DIV. 1, 2001 ADD 2002 | |
| X-RAY: | RT-NO | |
| GALLONS: | 73 | WT. 231 LBS. |
| SERIAL NO. | | |
| N.B. | | |

| | |
|---|---|
| 18-VA-73-F | REV. 8-14-03 |
| | DATE: 5-9-83 |
| FOR: HANSON STANDARD | |
| VERT. AIR TANK | |
| | |
| | |
| INSIDE: UNPAINTED | |
| | |
| OUTSIDE: PRIME | |
| | |
| BY: J.G. | SCALE: 3/4"=12" |

**ROY E. HANSON JR. MFG.**

1924 COMPTON AVE.
LOS ANGELES, CA 90011