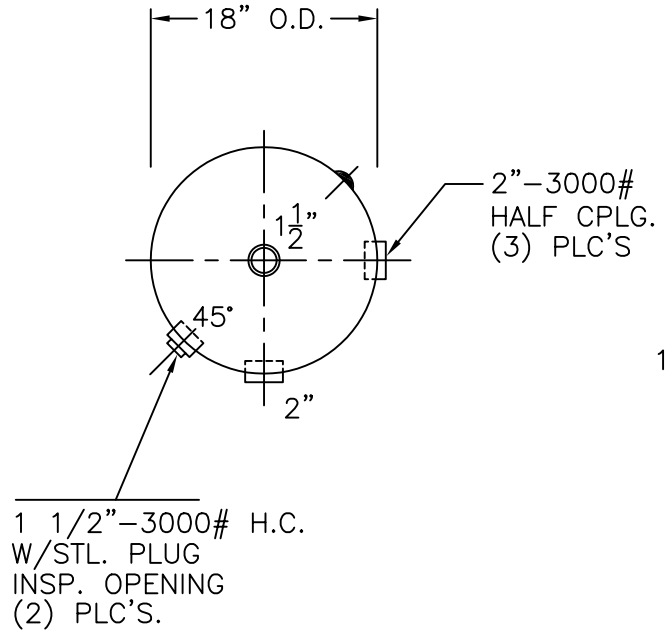

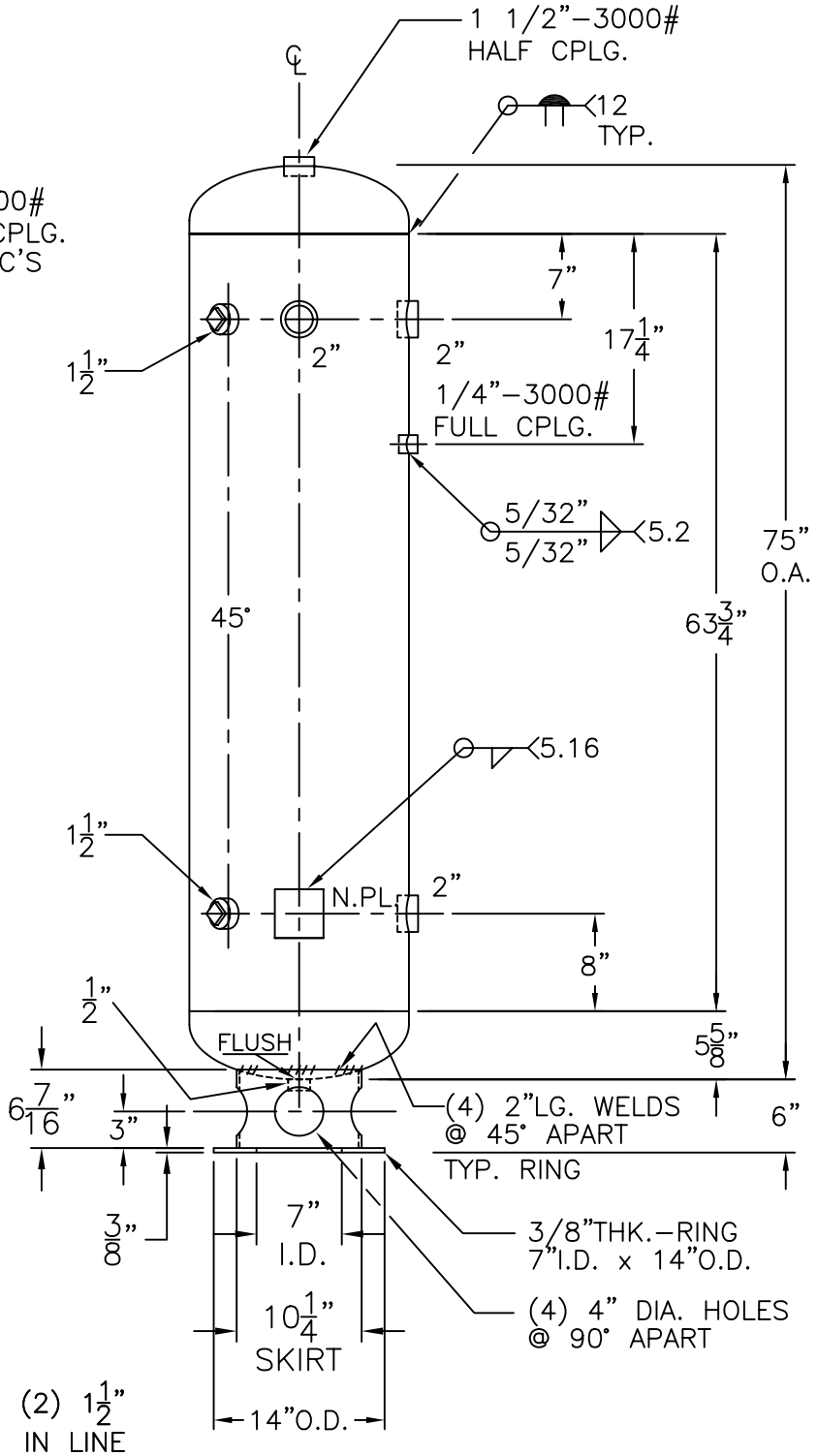

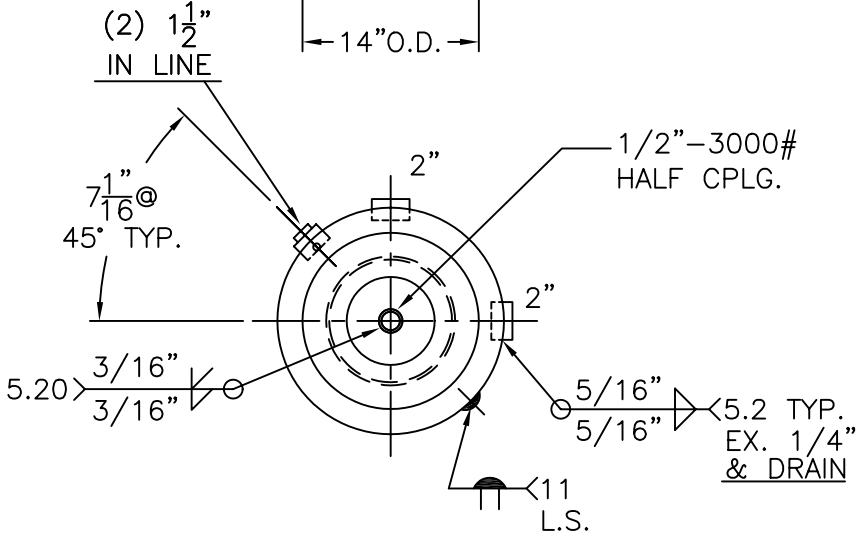

NOTE. 1) WELDS TO, OR JOINING SA-612 HAVE W.P.S. W/SUFFIX "B".
2) HYDRO @ 877 PSIG. MIN.

SHELL / HEADS	.345" SA-612 2:1 S.E.		
	337" SA-455		
M.A.W.P.	660 PSIG. @ 400 °F	M.D.M.T.	-20 °F @ 660 PSIG.
ASME. SECTION VIII DIV. 1, 2001 ADD 2002			
X-RAY:	RT-4 SPOT L.S. ONLY	GALLONS:	73
WT.	445 LBS.	SERIAL NO.	
N.B.			

18-VN-73-F		REV. 8-27-03	
DATE: 8-20-97			
FOR: HANSON STANDARD			
VERT. AIR TANK			
INSIDE: UNPAINTED			
OUTSIDE: PRIME			
BY: J.G.	SCALE: 3/4"=12"		

ROY E. HANSON JR. MFG.
1924 COMPTON AVE.
LOS ANGELES, CA 90011