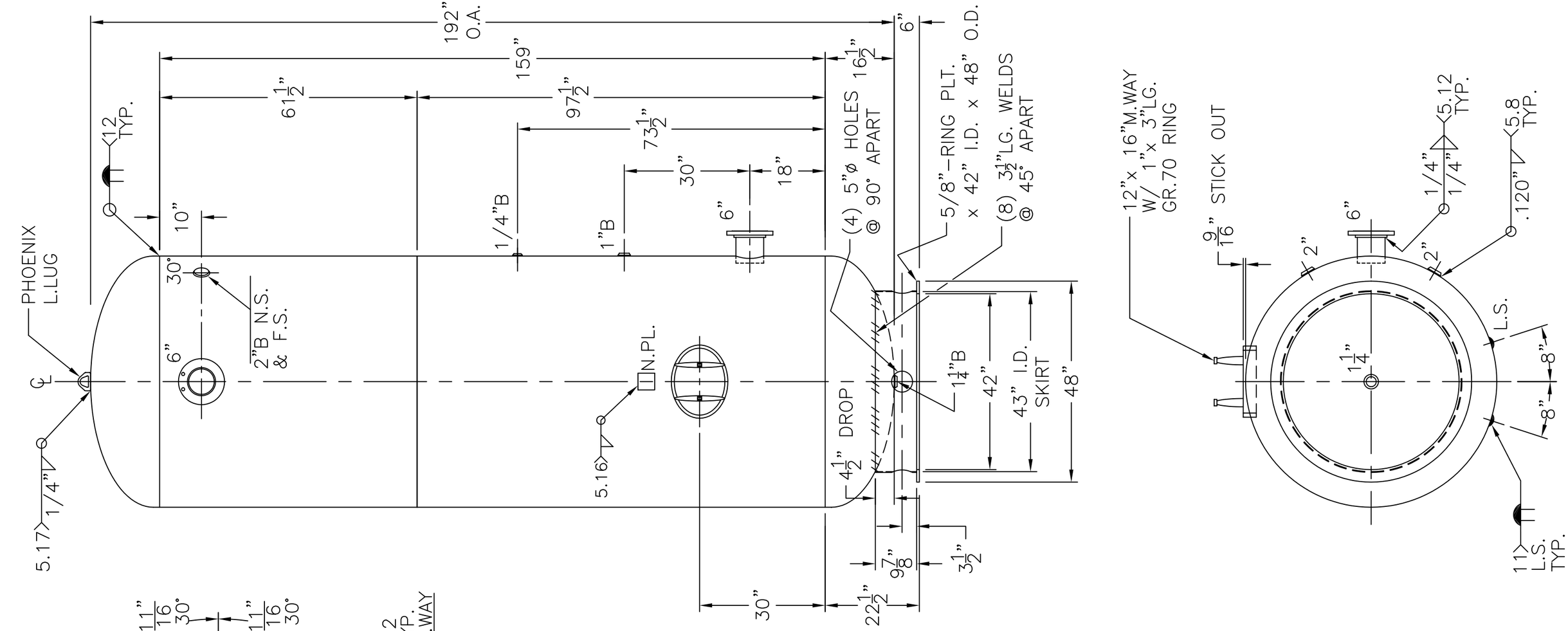

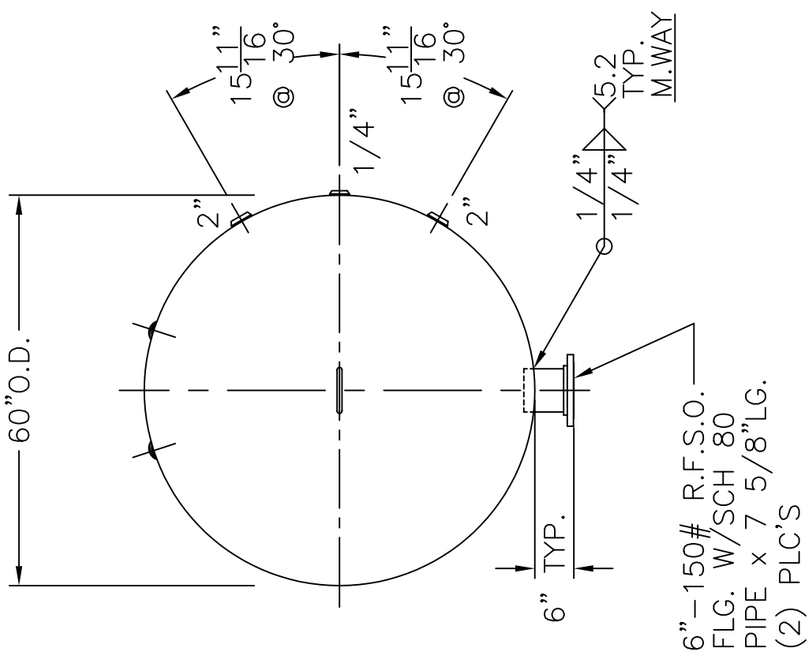

NOTE: 1) HYDRO @ 179 PSIG. MIN.

SHELL / HEADS	.248" SA-455 2:1 S.E.	60-VQ-2180-F	REV. 12-10-02
	(.225" MIN.)		DATE: 6-2-98
		FOR: HANSON STANDARD	
		VERT. AIR TANK	
	.248" SA-455		
		INSIDE: UNPAINTED	
M.A.W.P. 137 PSIG. @ 400 °F			
M.D.M.T. -20 °F @ 137 PSIG.		OUTSIDE: PRIME	
ASME. SECTION VIII DIV. 1, 2001 ADD 2002		CAD-"B" UNDER "STD"-SERIES	
X-RAY: RT-4 SPOT L.S.		BY: E.S.	SCALE:1/2"=12"
GALLONS: 2180	WT. 3104 LBS.	ROY E. HANSON JR. MFG.	
SERIAL NO.		1924 COMPTON AVE. LOS ANGELES, CA 90011	
N.B.			