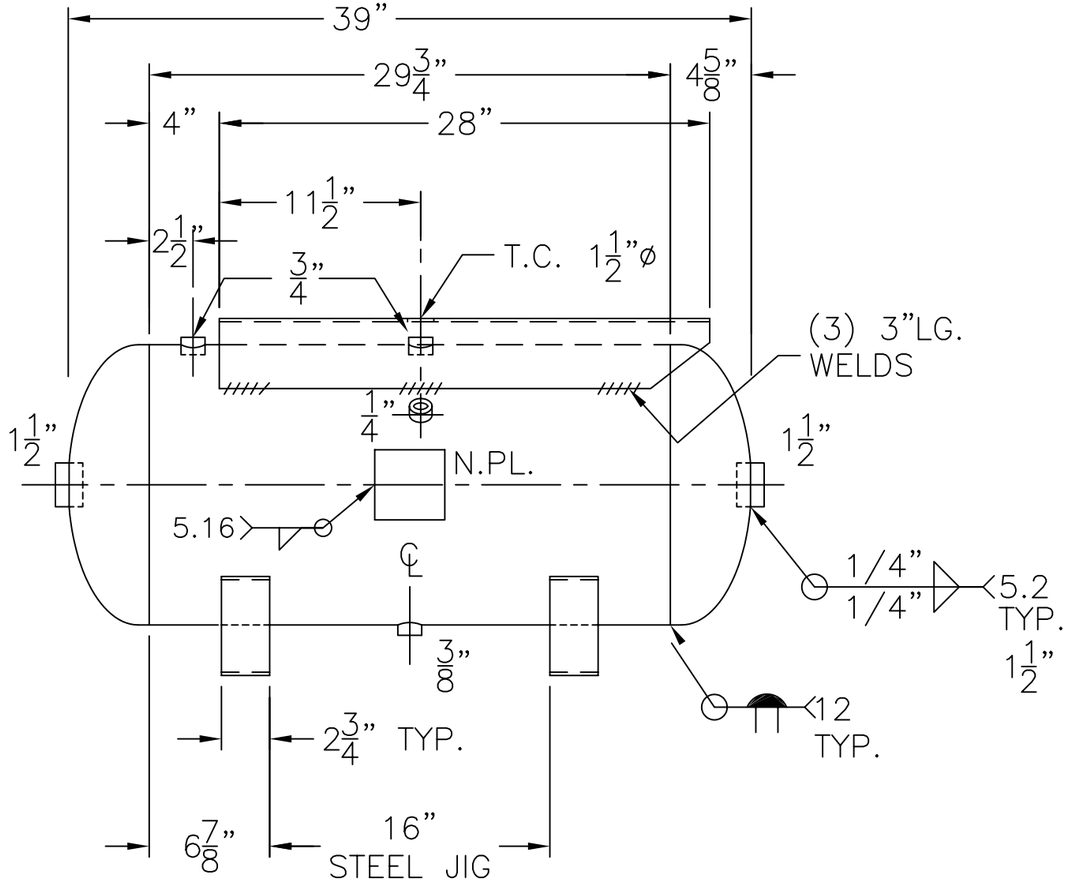

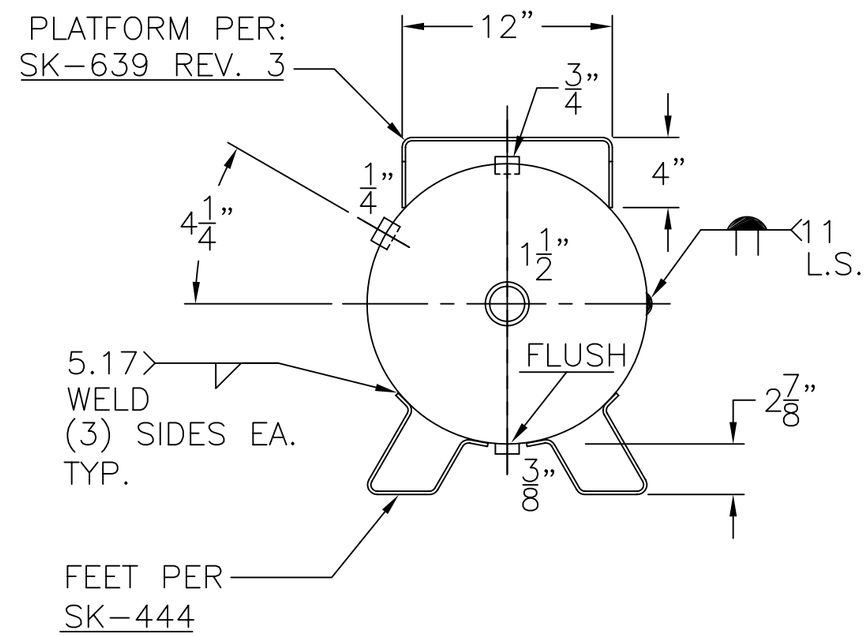

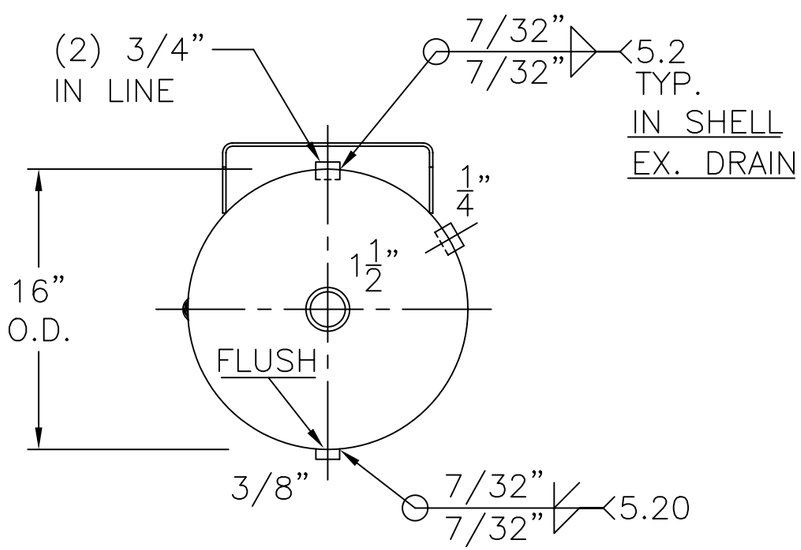

VIEW W/OUT SUPT'S

NOTE: 1) HYDRO @ 650 PSIG. MIN.
2) ALL CPLG'S ARE 3000# HALF, EXCEPT 1/4" FULL.

SHELL / HEADS	.250" SA-455 2:1 S.E.	H-30-FP-500	REV. 11-2-04
	JOGGLE		DATE: 7-10-80
		FOR: HANSON STANDARD	
		HORIZ. AIR TANK	
	.218" SA-455		
		INSIDE: UNPAINTED	
M.A.W.P. 500 PSIG. @ 400 °F			
M.D.M.T. -20 °F @ 500 PSIG.		OUTSIDE: PRIME	
ASME. SECTION VIII DIV. 1, 2001 ADD. 2003			
X-RAY: RT-4 SPOT L.S. ONLY		BY: J.G.	SCALE: 1"=12"
GALLONS: 30	WT. 194 LBS.	ROY E. HANSON JR. MFG.	
SERIAL NO.		1924 COMPTON AVE. LOS ANGELES, CA 90011	
N.B.			