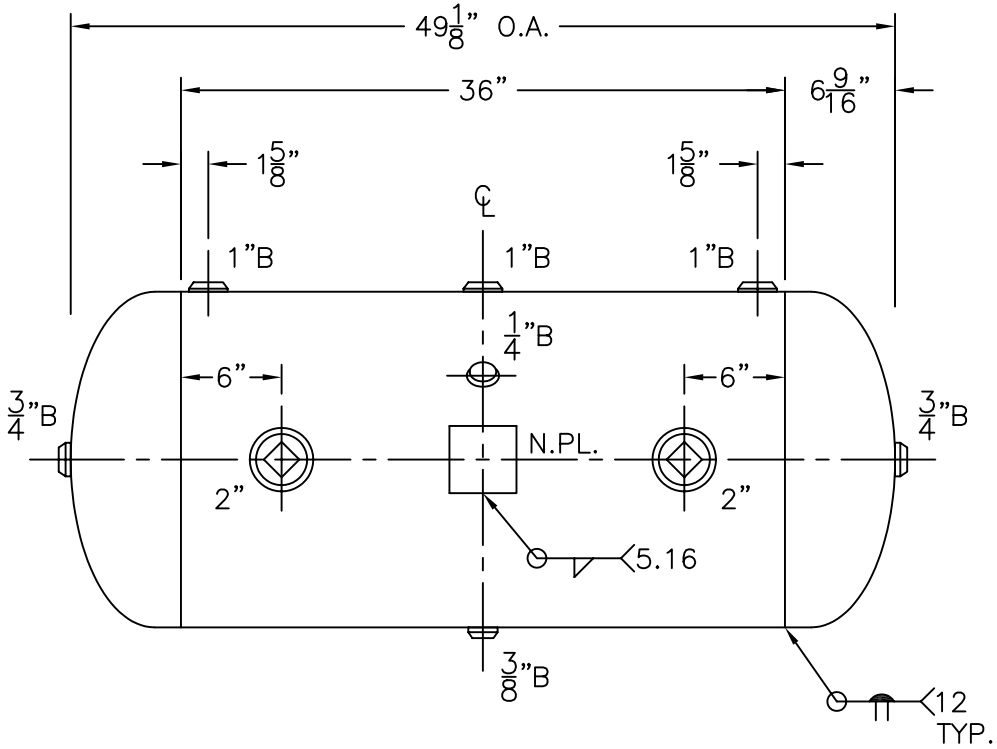

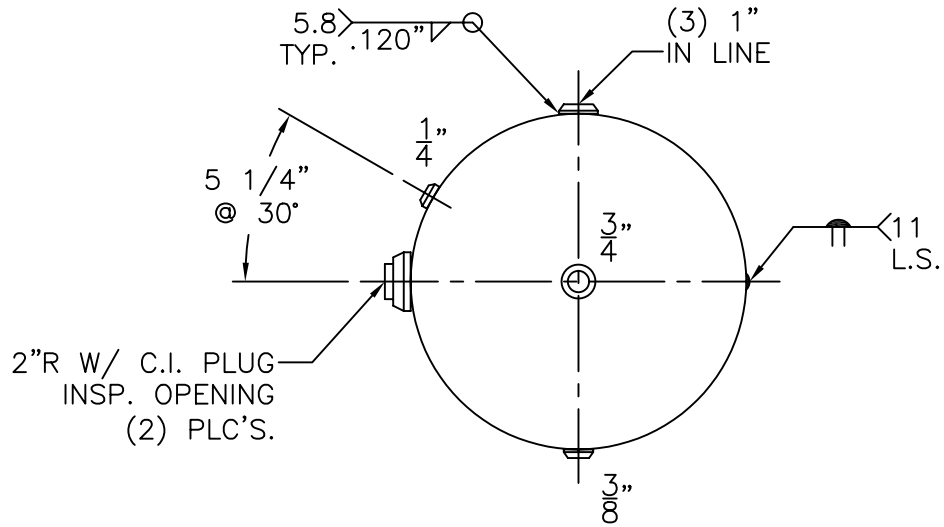

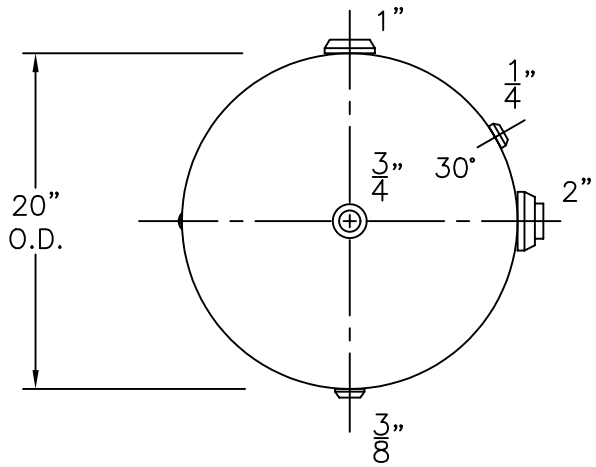

NOTE: 1) HYDRO @ 260 PSIG. MIN.

SHELL / HEADS	.140" SA-414-G 2:1 S.E.	
	JOGGLE	
	.165" SA-414-G	
M.A.W.P. 200 PSIG. @ 400 °F		
M.D.M.T. −20 °F @ 200 PSIG.		
ASME. SECTION VIII DIV. 1, 2001 ADD. 2002		
X-RAY: RT-NO		
GALLONS: 60	WT. 158 LBS.	
SERIAL NO.		
N.B.		

H-60	REV. 2-6-03
	DATE: 12-7-94
FOR: HANSON STANDARD	
HORIZ. AIR TANK	
INSIDE: UNPAINTED	
OUTSIDE: PRIME	
BY: E.S.	SCALE: 1"=12"

ROY E. HANSON JR. MFG.
1924 COMPTON AVE.
LOS ANGELES, CA 90011