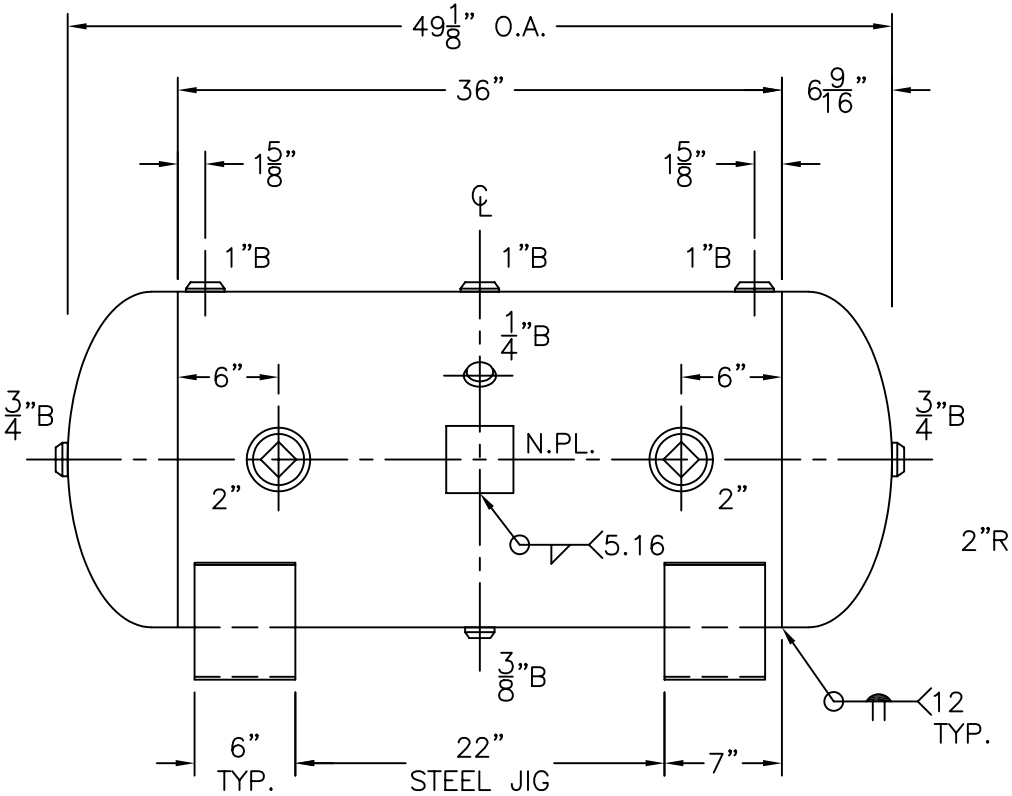

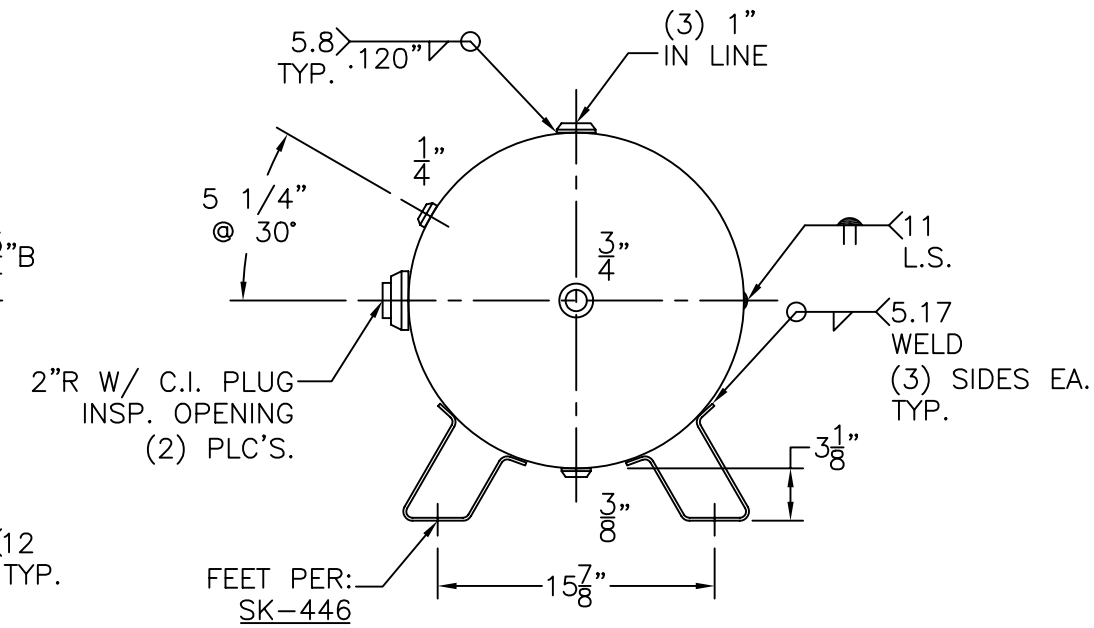

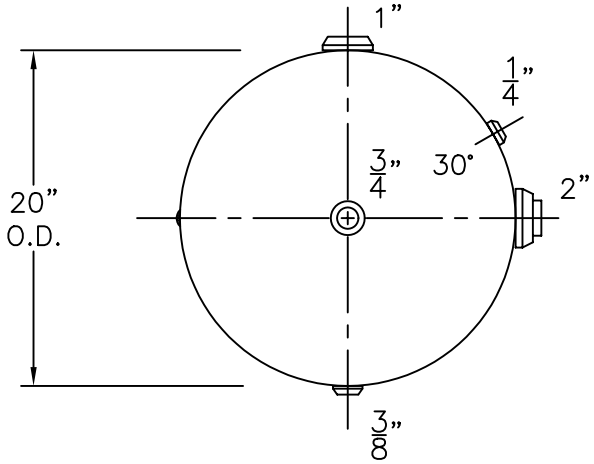

VIEW W/OUT SUPPORTS

NOTE: 1) HYDRO @ 260 PSIG. MIN.

SHELL / HEADS	.140" SA-414-G 2:1 S.E.	H-60-F	REV. 2-6-03
	JOGGLE		DATE: 10-9-85
		FOR: HANSON STANDARD	
		HORIZ. AIR TANK	
	.165" SA-414-G		
		INSIDE: UNPAINTED	
M.A.W.P. 200 PSIG. @ 400 °F			
M.D.M.T. -20 °F @ 200 PSIG.		OUTSIDE: PRIME	
ASME. SECTION VIII DIV. 1, 2001 ADD. 2002			
X-RAY: RT-NO		BY: E.S.	SCALE: 1"=12"
GALLONS: 60	WT. 180 LBS.	ROY E. HANSON JR. MFG.	
SERIAL NO.		1924 COMPTON AVE.	
N.B.		LOS ANGELES, CA 90011	