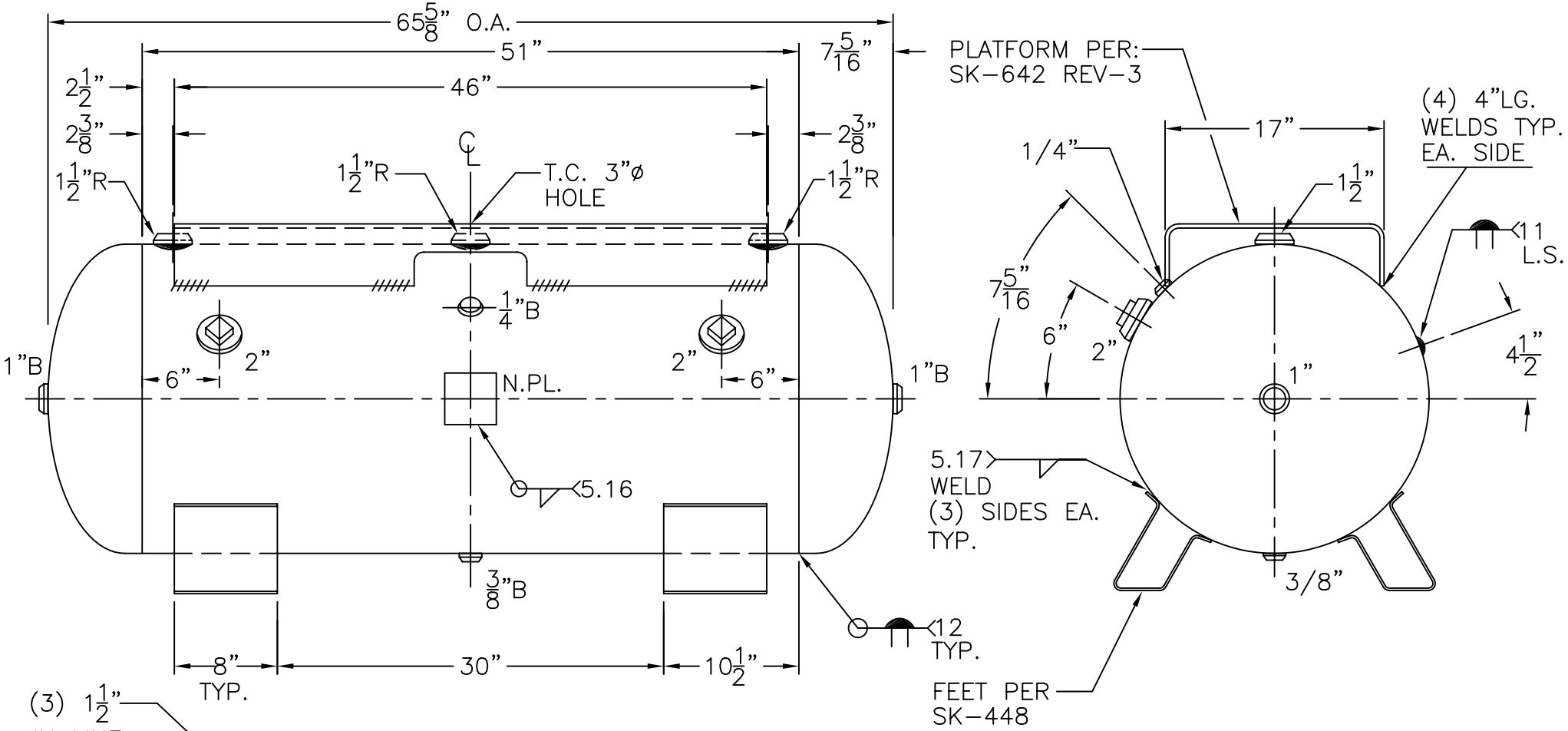

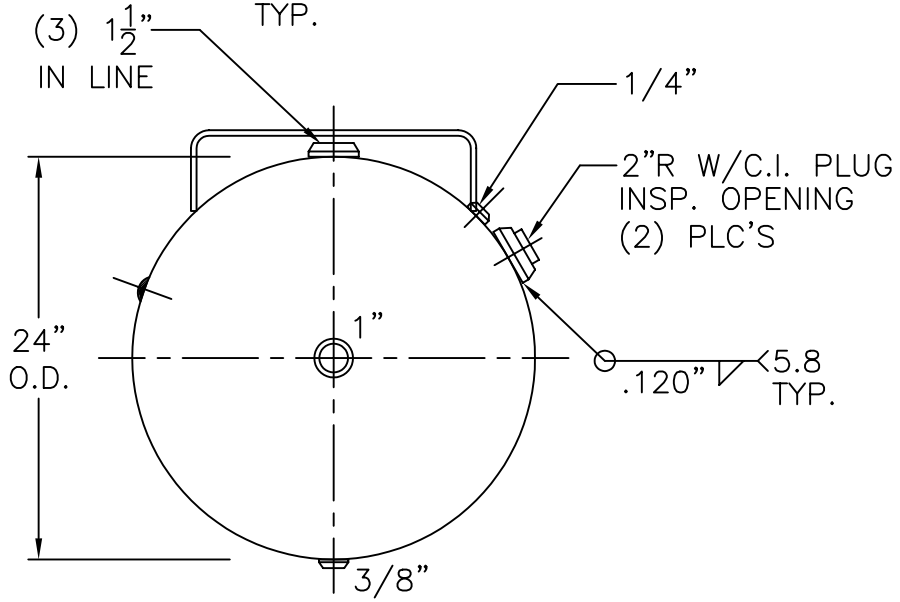

VIEW W/OUT SUPT'S

NOTE: 1) HYDRO @ 325 PSIG. MIN.

SHELL / HEADS	.164" SA-414-G 2:1 S.E.	
	JOGGLE	
	.200" SA-455	
M.A.W.P.	250 PSIG. @ 400 °F	
M.D.M.T.	-20 °F @ 250 PSIG.	
ASME. SECTION VIII	DIV. 1, 2001 ADD 2002	
X-RAY:	RT-NO	
GALLONS:	120	WT. 465 LBS.
SERIAL NO.		
N.B.		

HC-120-FP	REV. 6-23-03
	DATE: 6-28-93
FOR: HANSON STANDARD	
HORIZ. AIR TANK	
INSIDE: UNPAINTED	
OUTSIDE: PRIME	
BY: E.S.	SCALE: 1"=12"

ROY E. HANSON JR. MFG.
1924 COMPTON AVE.
LOS ANGELES, CA 90011