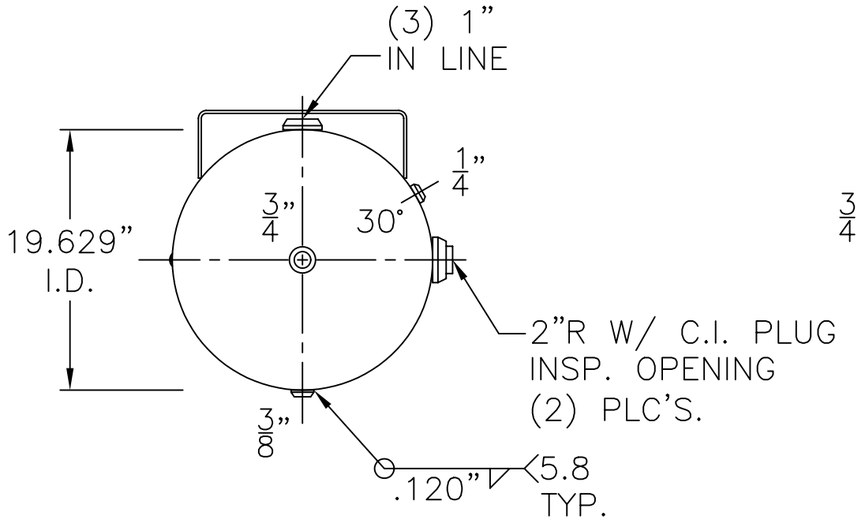

VIEW W/OUT SUPT'S

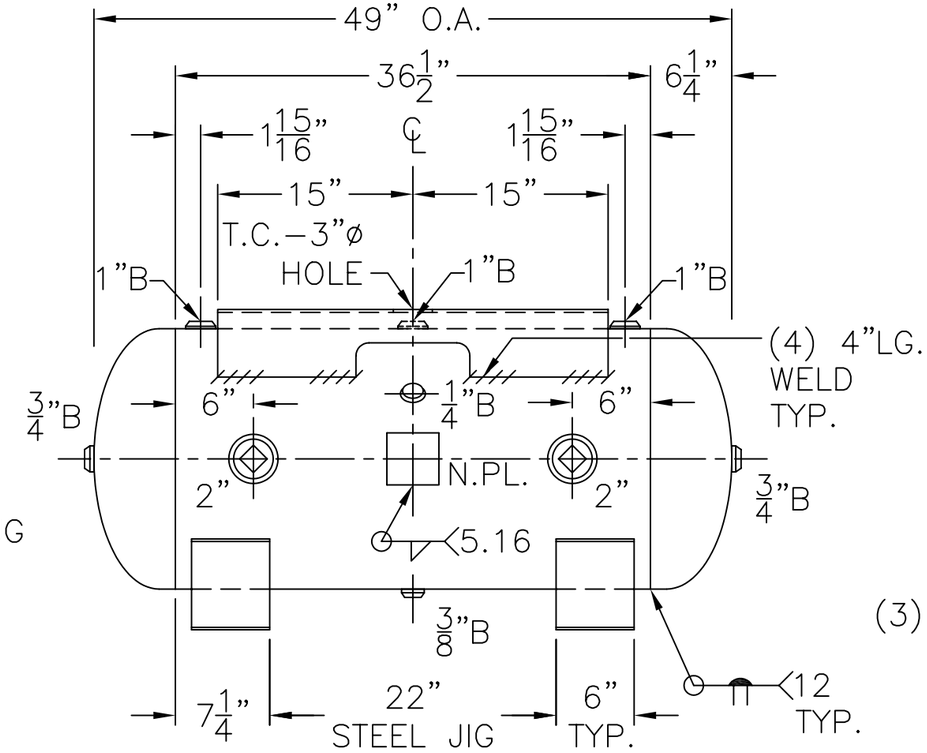

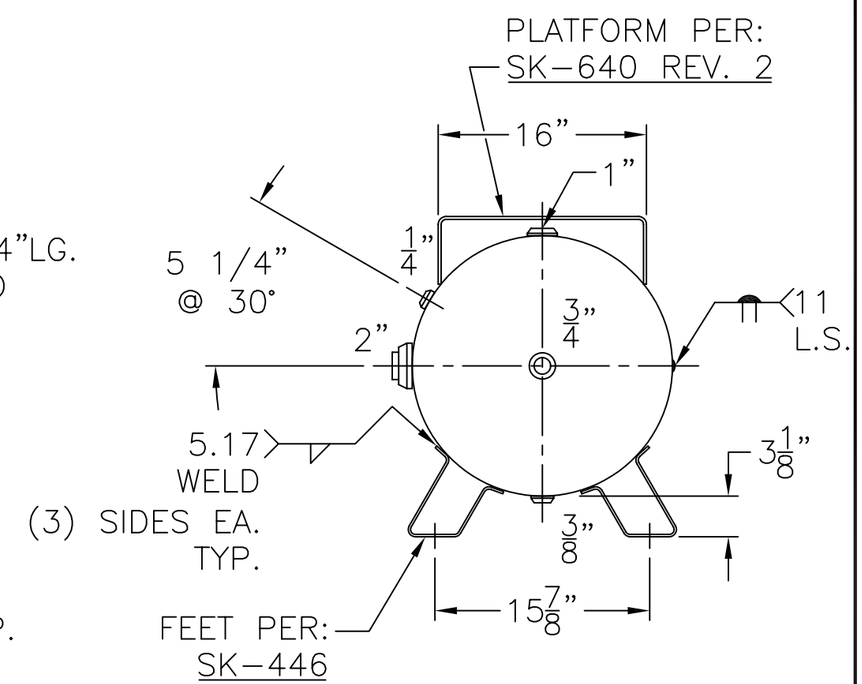

NOTE: 1) HYDRO @ 326 PSIG. MIN.

SHELL / HEADS	.135" SA-414-G 2:1 S.E.	HC-60-FP — REV. 4-28-05
	JOGGLE	DATE: 5-17-88
		FOR: HANSON STANDARD
		HORIZ. AIR TANK
	.166" SA-414-G	
		INSIDE: UNPAINTED
M.A.W.P. 250 PSIG. @ 400 °F		
M.D.M.T. -20 °F @ 250 PSIG.		OUTSIDE: PRIME
ASME. SECTION VIII DIV. 1, 2004 ADD. 2004		CAD-"B" UNDER "STD"-SERIES
X-RAY: RT-4 SPOT G.S. ONLY NOT L.S.		BY: J.G. — SCALE: 1"=12"
GALLONS: 60	WT. 233 LBS.	ROY E. HANSON JR. MFG.
SERIAL NO.		1924 COMPTON AVE.
N.B.		LOS ANGELES, CA 90011