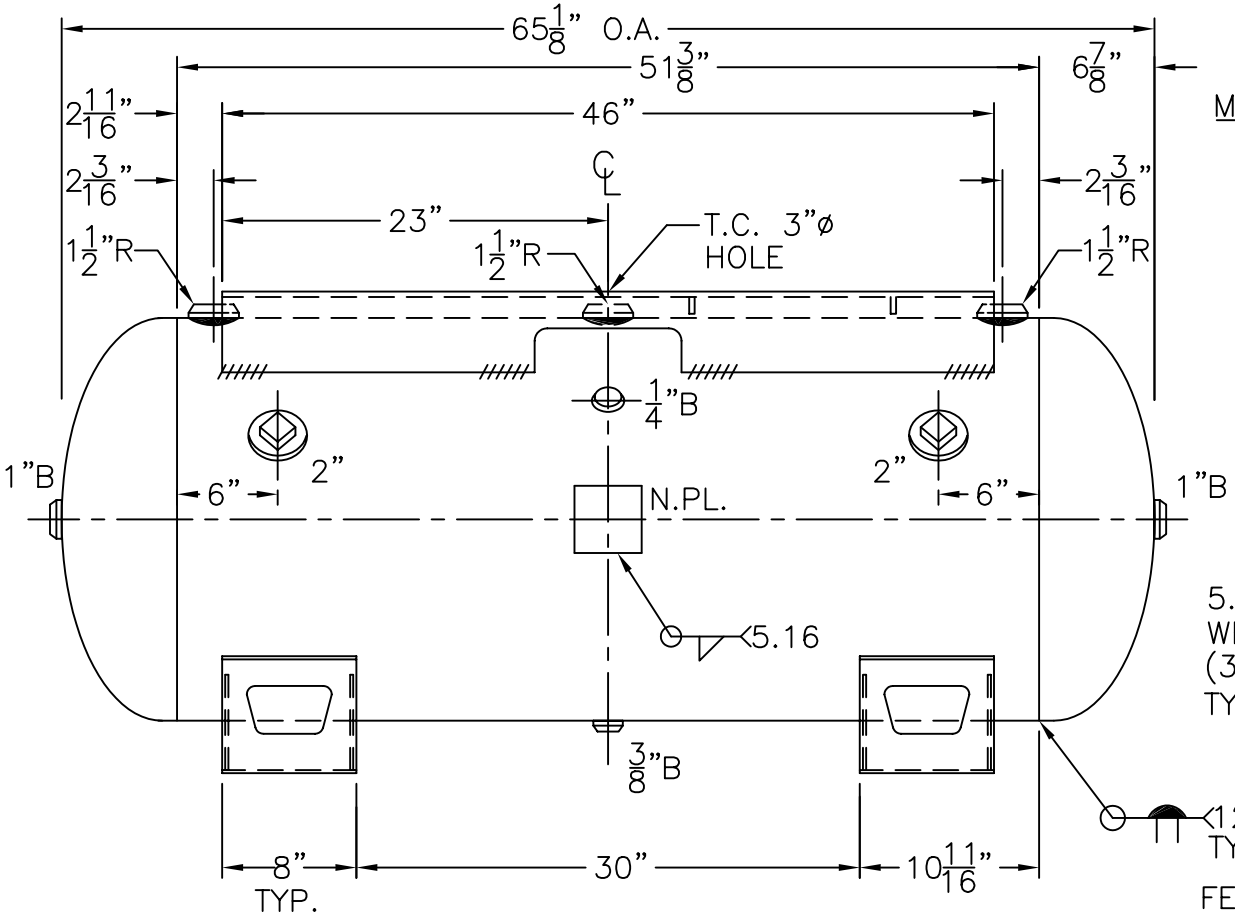

PLATFORM PER:
SK-642 REV. 3
MOD. B (.326"PL.)

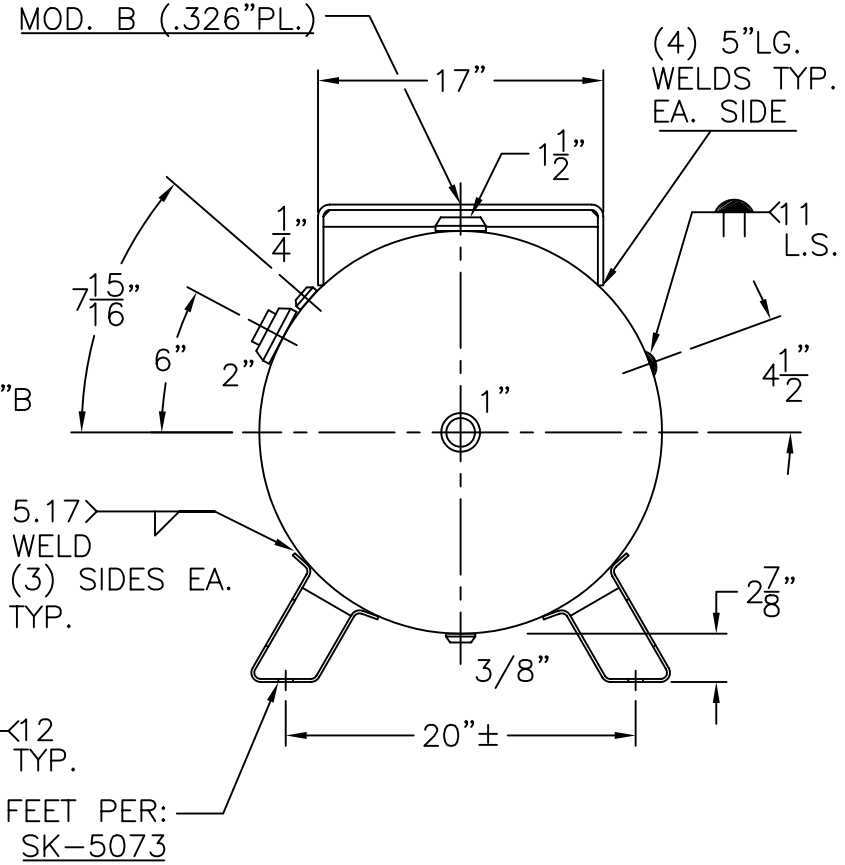

FEET PER:
SK-5073

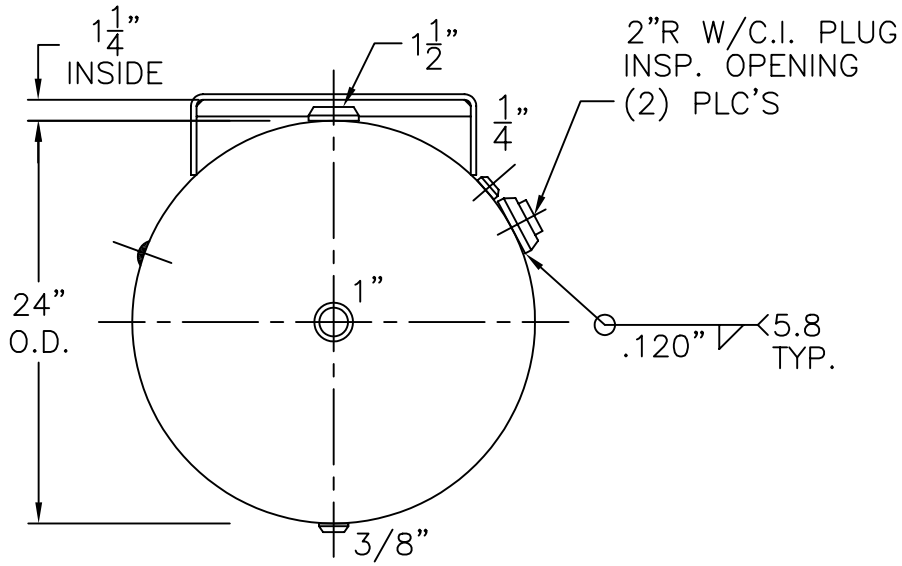

VIEW W/OUT SUPT'S

NOTE: 1) HYDRO @ 390 PSIG. MIN.

SHELL / HEADS	.200" SA-455 2:1 S.E.	
	(.195" MIN.) JOGGLE	
	.200" SA-455	
M.A.W.P.	300 PSIG. @ 400 °F	
M.D.M.T.	-20 °F @ 300 PSIG.	
ASME. SECTION VIII	DIV. 1, 2001 ADD 2002	
X-RAY:	RT-4 SPOT L.S. ONLY	
GALLONS: 120	WT. 466 LBS.	
SERIAL NO.		
N.B.		

HD-120-BP	REV. 6-25-03
	DATE: 12-18-86
FOR: HANSON STANDARD HORIZ. AIR TANK	
INSIDE: UNPAINTED	
OUTSIDE: PRIME	
BY: E.S.	SCALE: 1"=12"

ROY E. HANSON JR. MFG.
1924 COMPTON AVE.
LOS ANGELES, CA 90011