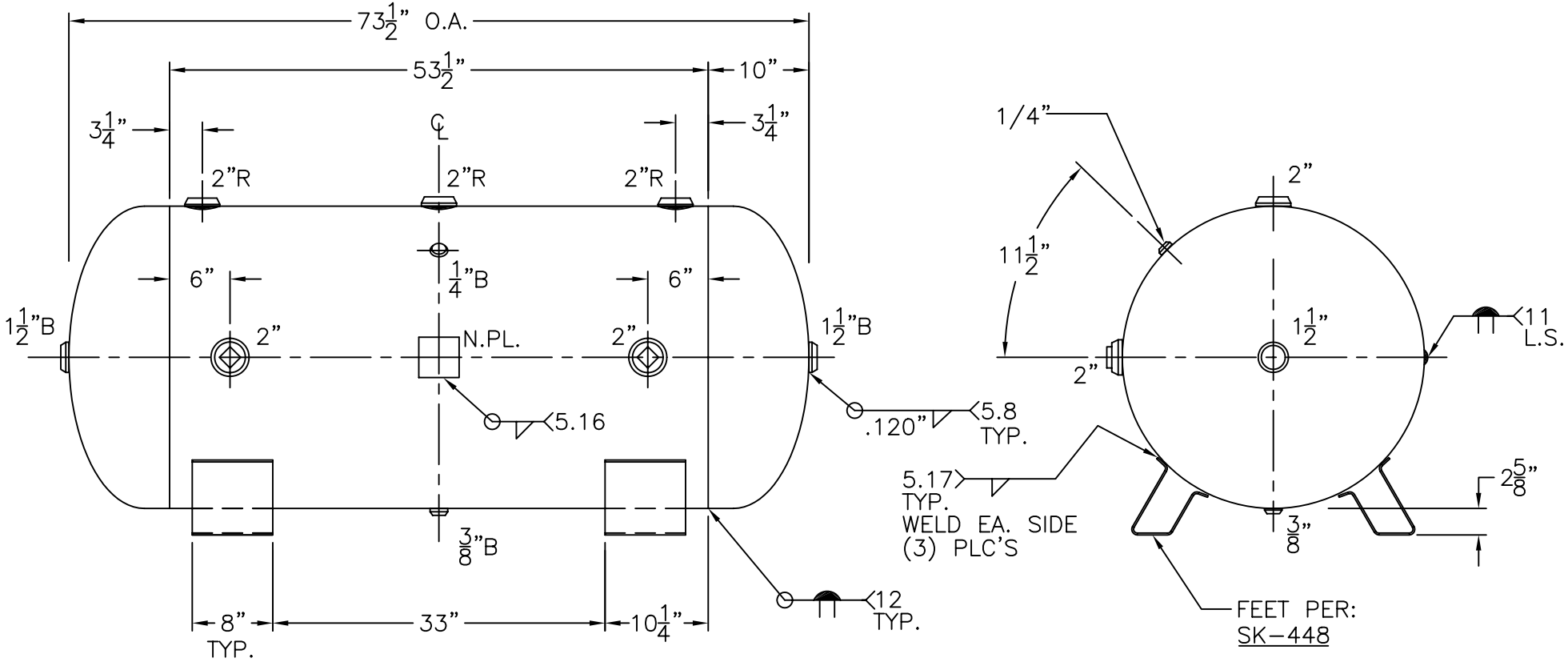

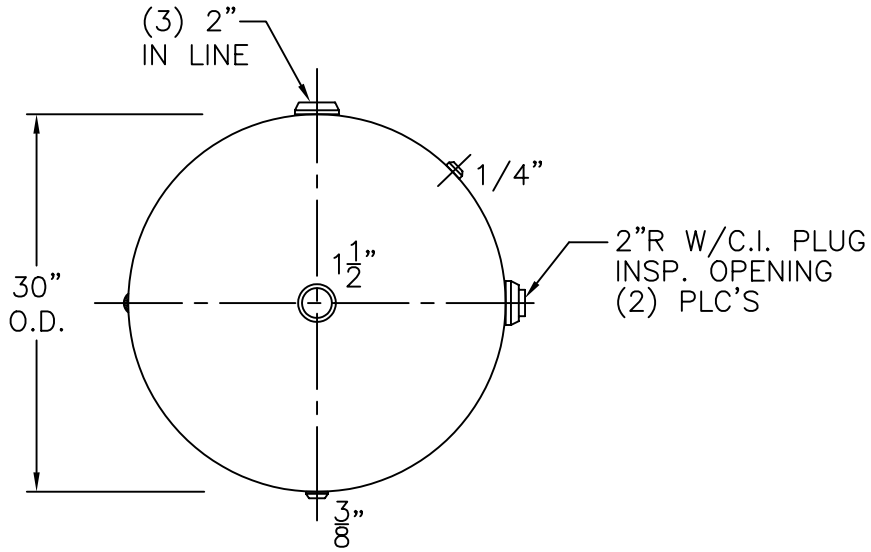

VIEW W/OUT SUPT.

2) FOR C.R.N. SEE OLD PRINT DATED 9-10-80.

NOTE: 1) HYDRO @ 390 PSIG. MIN.

SHELL / HEADS	.250" SA-455 2.1 S.E.	HD-200-B
	(.244" MIN.) JOGGLE	REV. 7-21-03
		DATE: 12-18-86
		FOR: HANSON STANDARD
		HORIZ. AIR TANK
	.250" SA-455	
		INSIDE: UNPAINTED
M.A.W.P. 300 PSIG. @ 400 °F		
M.D.M.T. -20 °F @ 300 PSIG.		OUTSIDE: PRIME
ASME. SECTION VIII DIV. 1, 2001 ADD 2002		
X-RAY: RT-4 SPOT L.S. ONLY		BY: E.S. SCALE: 3/4"=12"
GALLONS: 200	WT. 572 LBS.	ROY E. HANSON JR. MFG.
SERIAL NO.		1924 COMPTON AVE.
N.B.		LOS ANGELES, CA 90011