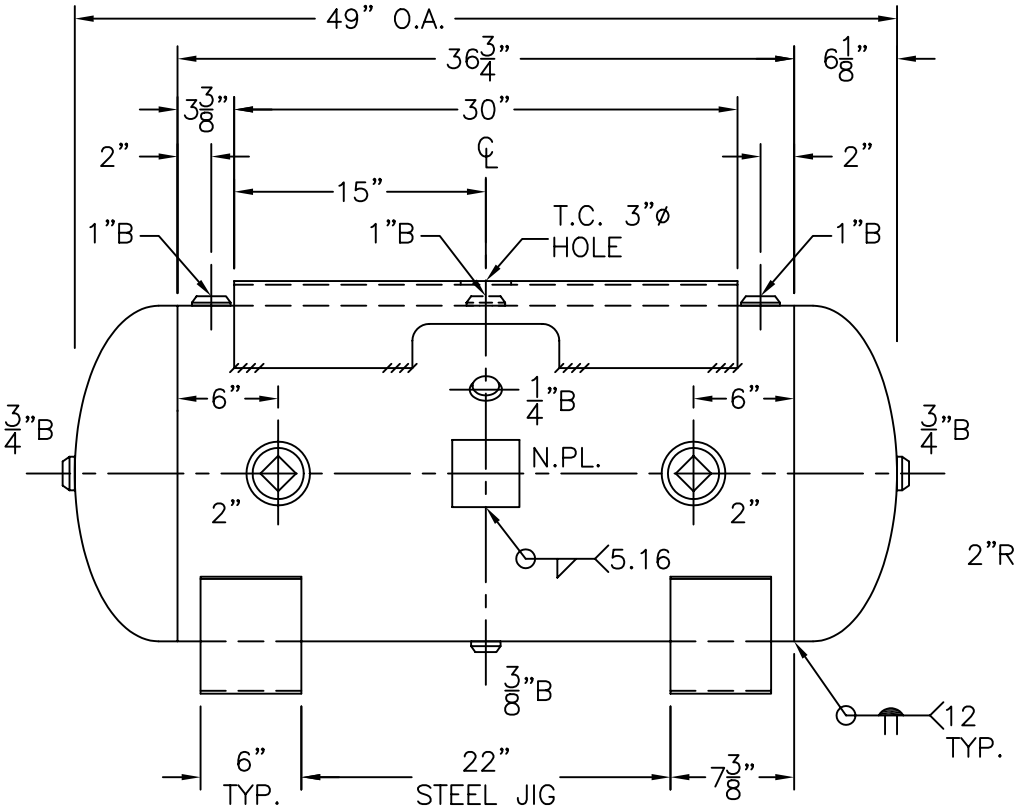

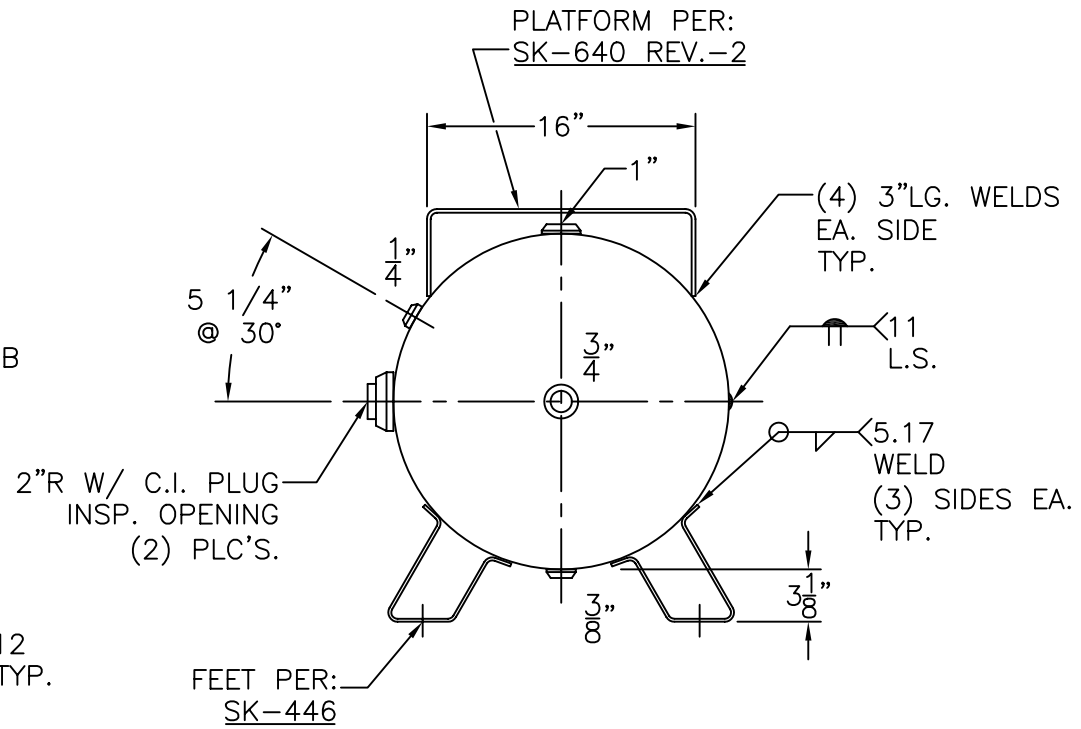

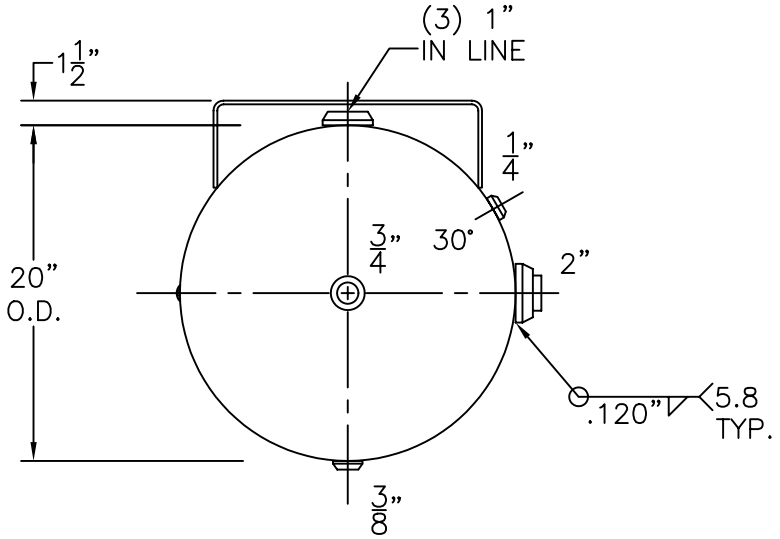

VIEW W/OUT SUPPORTS

NOTE: 1) HYDRO @ 390 PSIG. MIN.

SHELL / HEADS	.164" MIN. SA-414-G 2:1 S.E.	
	JOGGLE	
	.165" SA-414-G	
M.A.W.P. 300 PSIG. @ 400 °F		
M.D.M.T. -20 °F @ 300 PSIG.		
ASME. SECTION VIII DIV. 1, 2001 ADD. 2003		
X-RAY: RT-4 SPOT L.S. ONLY		
GALLONS: 60	WT. 247 LBS.	
SERIAL NO.		
N.B.		

HD-60-FP	REV. 4-26-04
	DATE: 12-18-86
FOR: HANSON STANDARD	
HORIZ. AIR TANK	
INSIDE: UNPAINTED	
OUTSIDE: PRIME	
BY: J.G.	SCALE: 1"=12"

ROY E. HANSON JR. MFG.
1924 COMPTON AVE.
LOS ANGELES, CA 90011