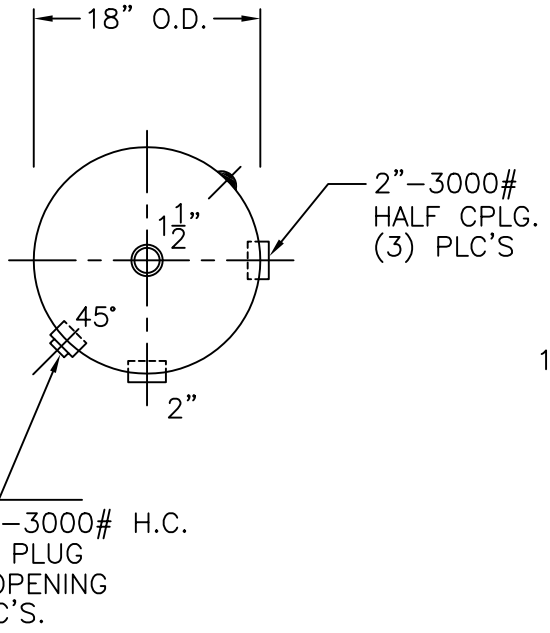

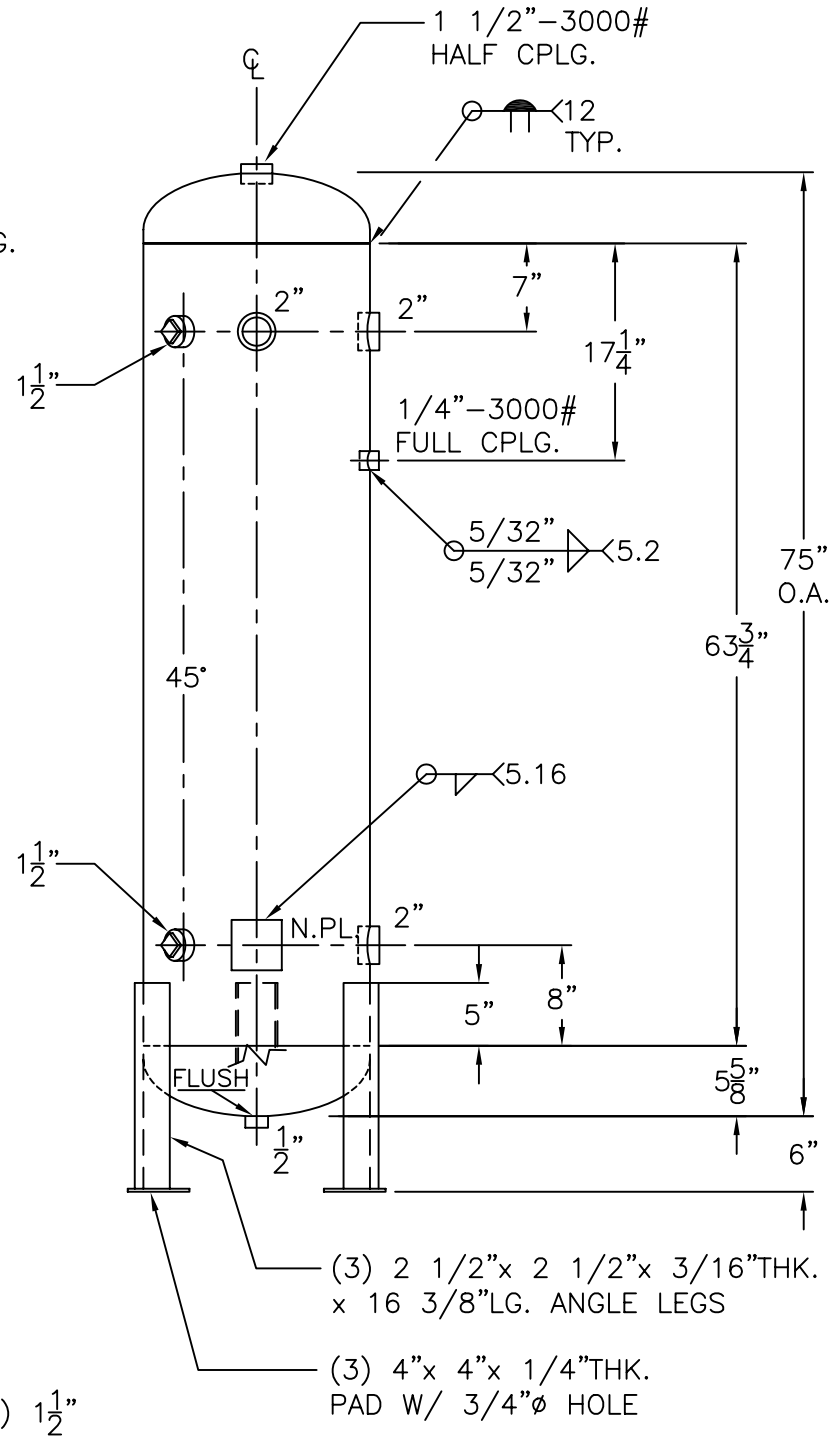

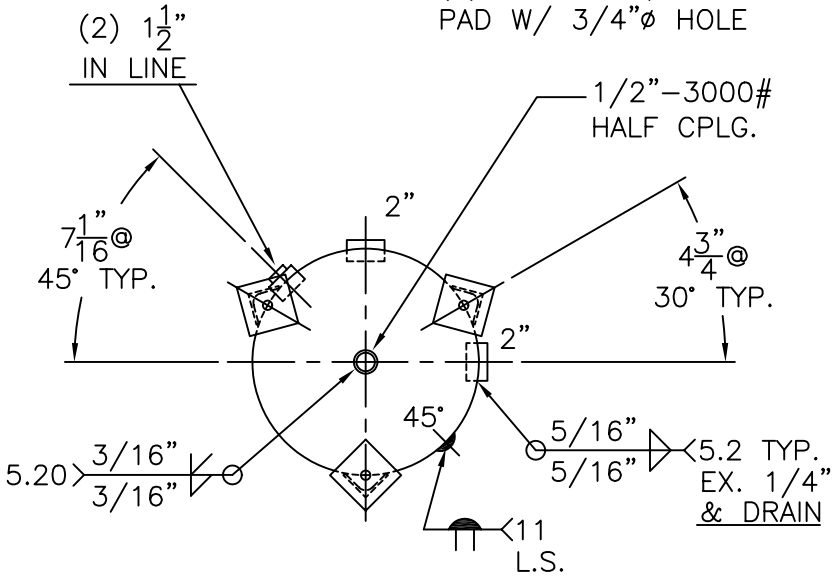

NOTE. 1) WELDS TO, OR JOINING SA-612 HAVE W.P.S. W/SUFFIX "B".
2) HYDRO @ 877 PSIG. MIN.

SHELL / HEADS			
	.345" SA-612	2:1 S.E.	
	.337" SA-455		
M.A.W.P.	660 PSIG. @	400 °F	
M.D.M.T.	-20 °F @	660 PSIG.	
ASME. SECTION VIII	DIV. 1, 2001 ADD 2002		
X-RAY:	RT-4 SPOT L.S. ONLY		
GALLONS: 73	WT. 439 LBS.		
SERIAL NO.			
N.B.			

18-VN-73-L	REV. 8-27-03
FOR: HANSON STANDARD	DATE: 12-28-84
VERT. AIR TANK	
INSIDE: UNPAINTED	
OUTSIDE: PRIME	
LEG-ZONE 4-15 KM.	
BY: J.G.	SCALE: 3/4"=12"

ROY E. HANSON JR. MFG.
1924 COMPTON AVE.
LOS ANGELES, CA 90011