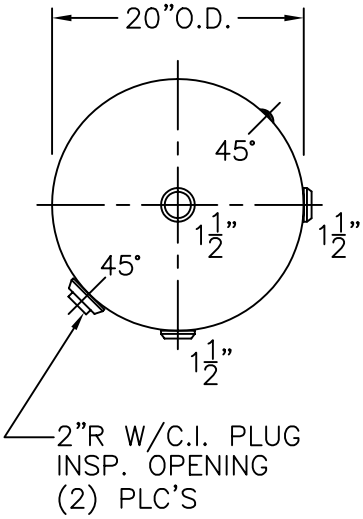

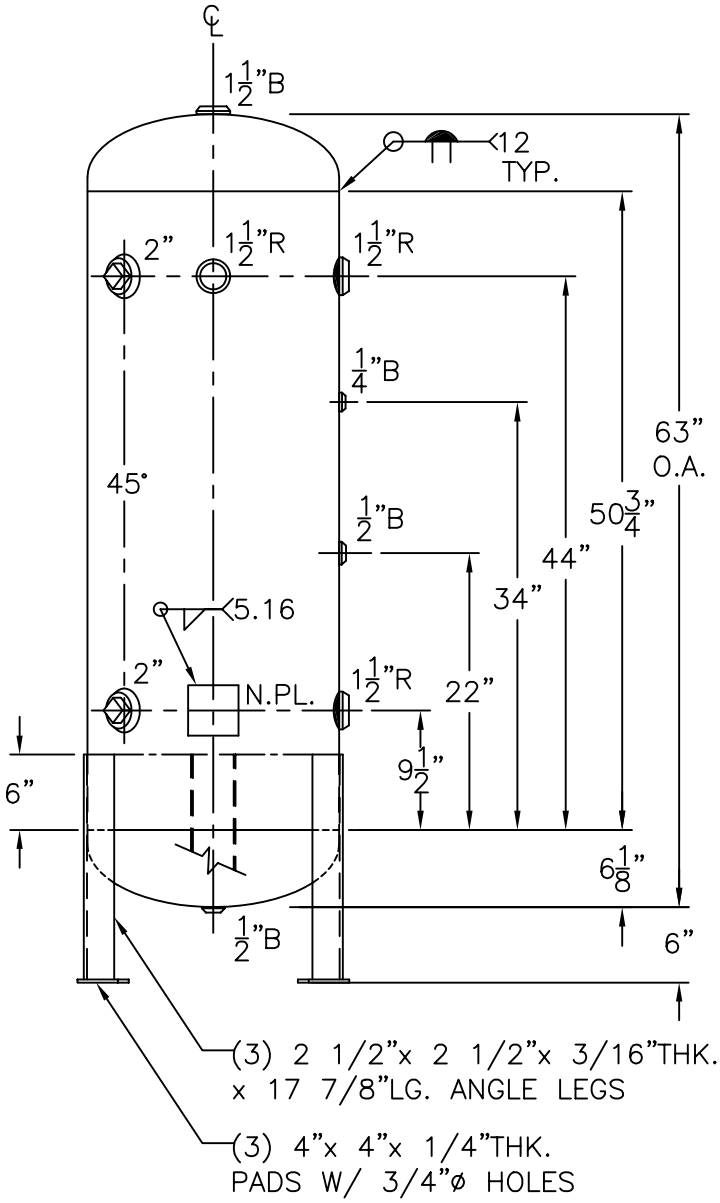

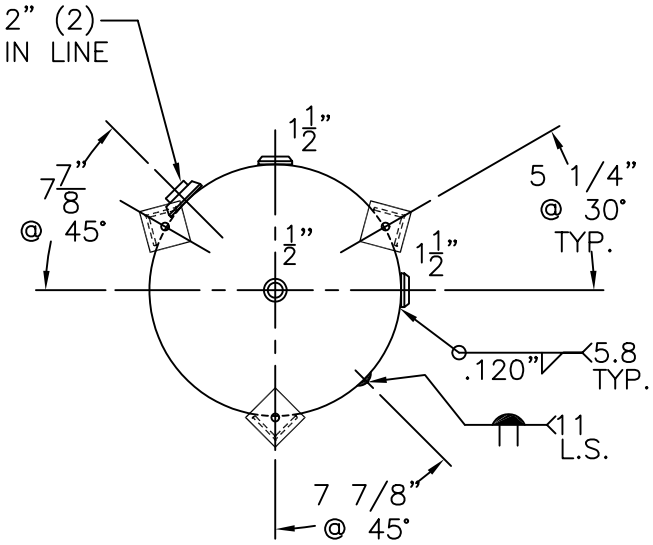

NOTE: 1) HYDRO @ 390 PSIG. MIN.

SHELL / HEADS			
			.166" SA-414-G 2:1 S.E.
			JOGGLE
		.200" SA-455	
M.A.W.P.	300 PSIG. @	400 °F	
M.D.M.T.	-20 °F @	300 PSIG.	
ASME. SECTION VIII DIV. 1, 2001 ADD 2002			
X-RAY:	RT-NO		
GALLONS:	80	WT. 257 LBS.	
SERIAL NO.			
N.B.			

20-VD-80-L	REV. 6-20-03
FOR: HANSON STANDARD	DATE: 10-30-87
VERT. AIR TANK	
INSIDE: UNPAINTED	
OUTSIDE: PRIME	
LEG ZONE: 4-15KM.	
BY: J.G.	SCALE: 3/4"=12"

ROY E. HANSON JR. MFG.
1924 COMPTON AVE.
LOS ANGELES, CA 90011