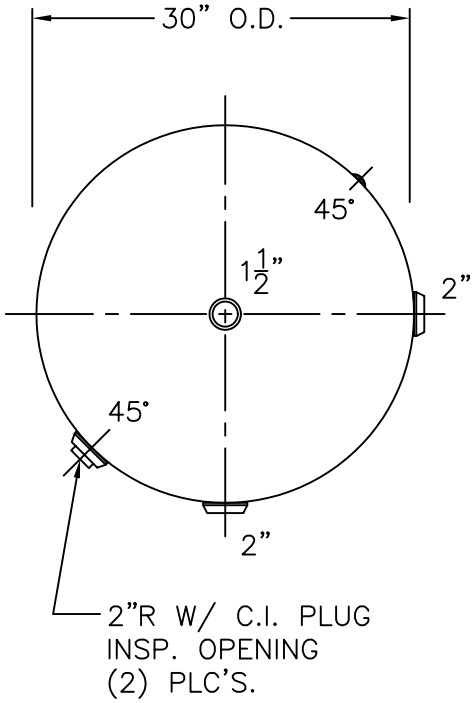

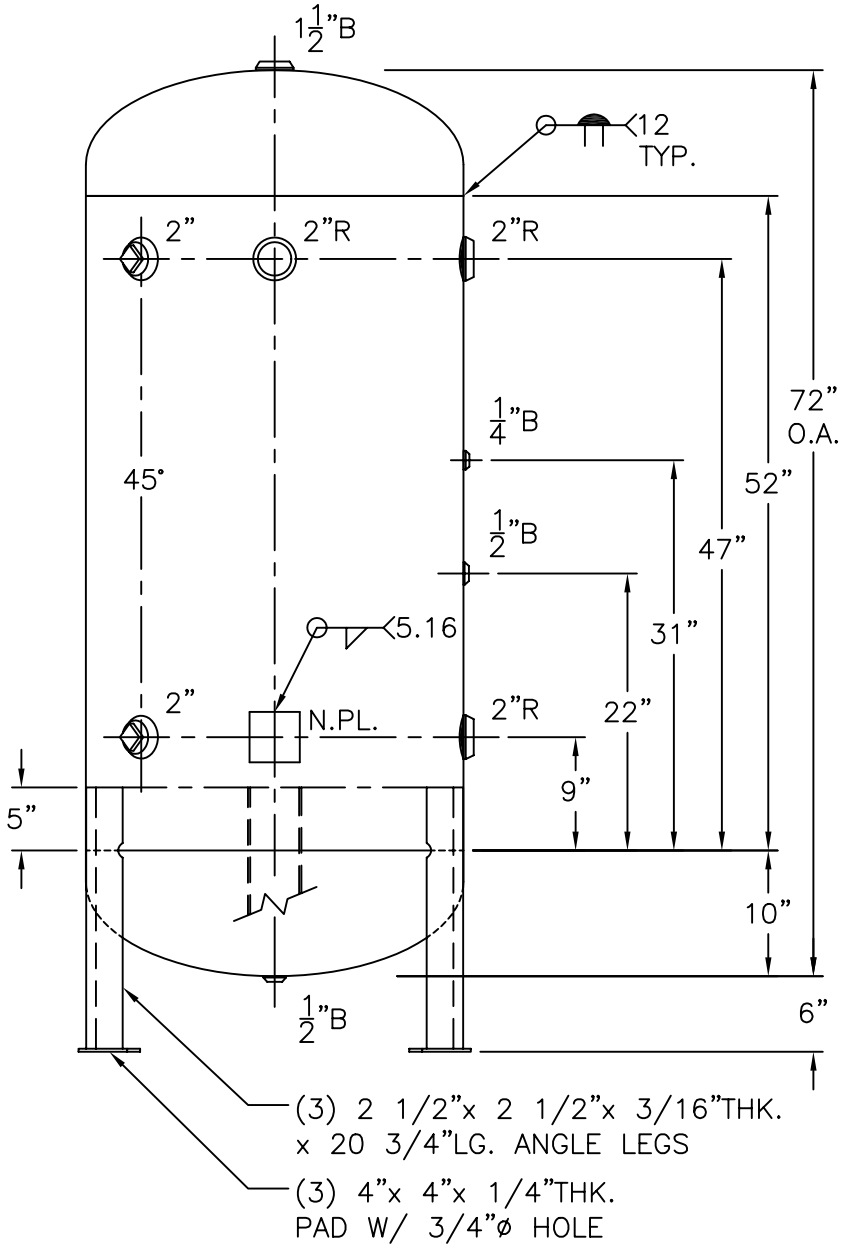

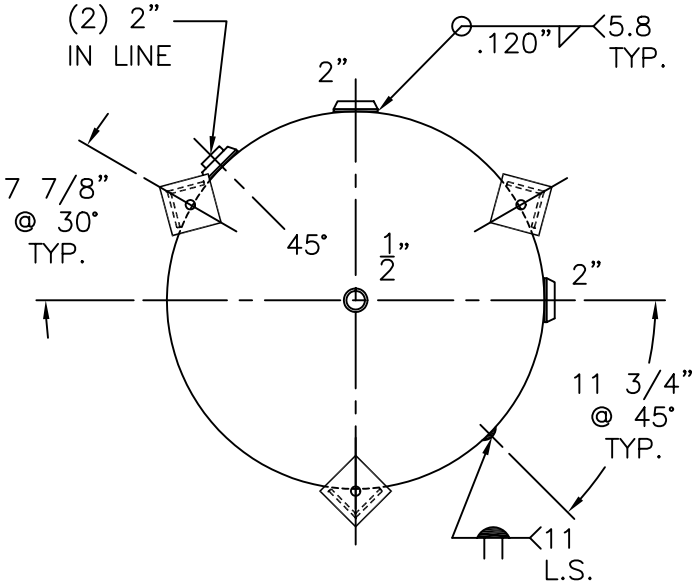

NOTE: 1) HYDRO @ 390 PSIG. MIN.

SHELL / HEADS	.250" SA-455 2:1 S.E.
	JOGGLE
	.250" SA-455
M.A.W.P.	300 PSIG. @ 400 °F
M.D.M.T.	-20 °F @ 300 PSIG.
ASME. SECTION VIII	DIV. 1, 2001 ADD 2002
X-RAY:	RT-4 SPOT L.S. ONLY
GALLONS: 200	WT. 575 LBS.
SERIAL NO.	
N.B.	

30-VD-200-L	REV. 8-7-03
FOR: HANSON STANDARD	DATE: 12-17-86
VERT. AIR TANK	
INSIDE: UNPAINTED	
OUTSIDE: PRIME	
LEG-ZONE 4-15 KM.	
BY: E.S.	SCALE: 3/4"=12"

ROY E. HANSON JR. MFG.
1924 COMPTON AVE.
LOS ANGELES, CA 90011