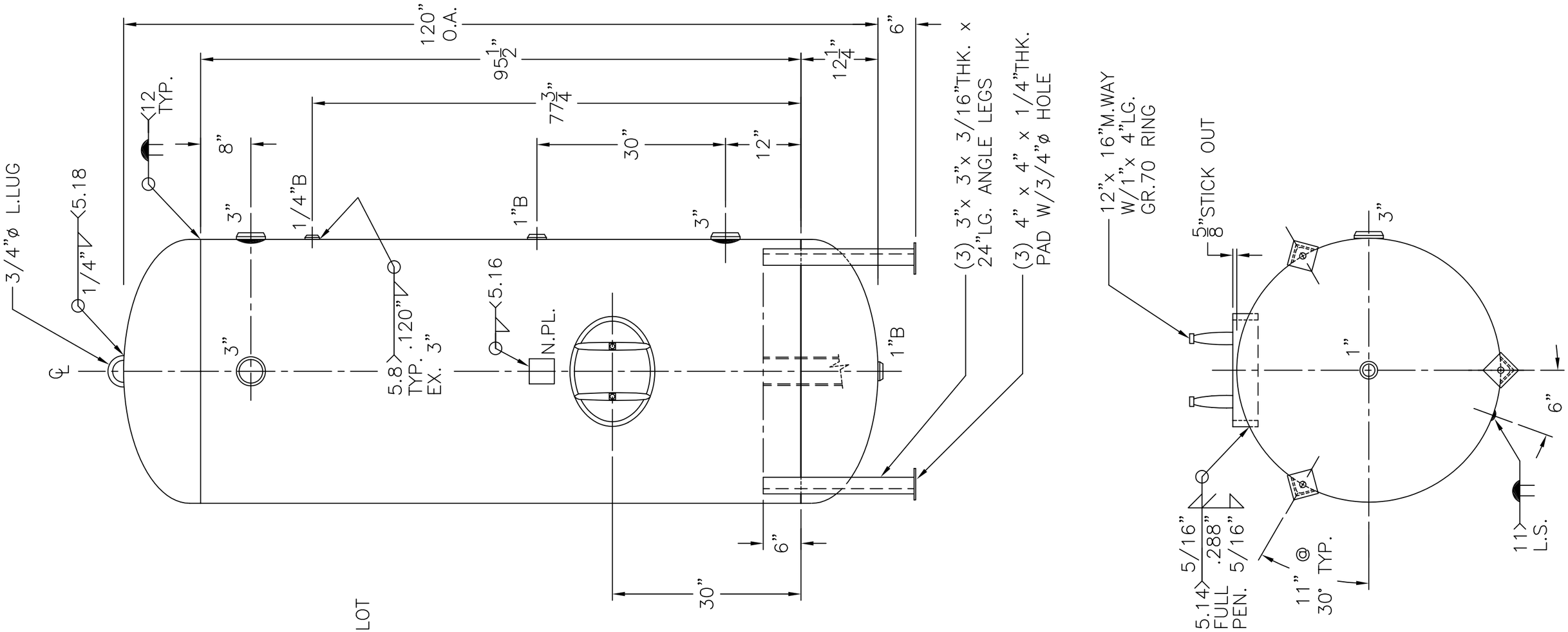

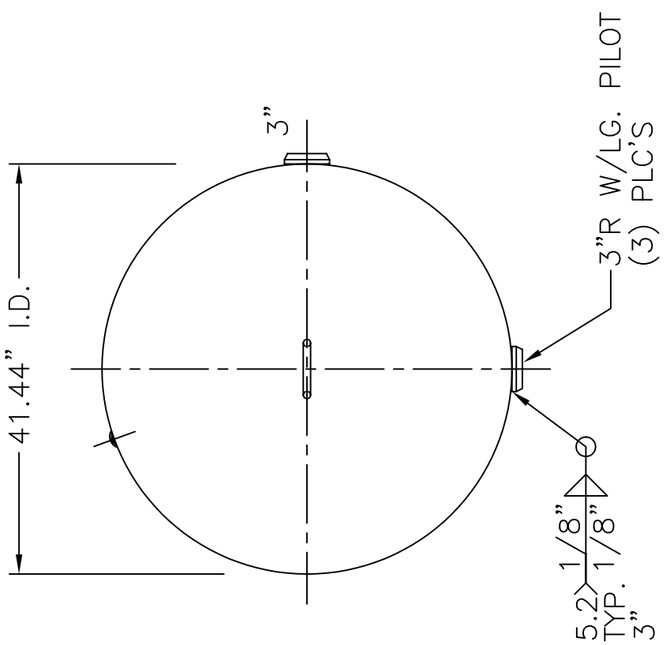

NOTE: 1) HYDRO @ 325 PSIG. MIN.

SHELL / HEADS	.245" SA-455 2:1 S.E.	42-VC-660-L	REV. 12-4-02
			DATE: 2-5-80
		FOR: HANSON STANDARD	
		VERT. AIR TANK	
	.288" SA-455		
		INSIDE: UNPAINTED	
M.A.W.P. 250 PSIG. @ 400 °F			
M.D.M.T. -20 °F @ 250 PSIG.		OUTSIDE: PRIME	
ASME. SECTION VIII DIV. 1, 2001 ADD 2002		CAD "B" SIZE UNDER "STD"-SERIES	
X-RAY: RT-4 SPOT L.S. & HDS. G.S.		BY: J.G.	SCALE:3/4"=12"
GALLONS: 660	WT. 1479 LBS.	ROY E. HANSON JR. MFG.	
SERIAL NO.		1924 COMPTON AVE. LOS ANGELES, CA 90011	
N.B.			