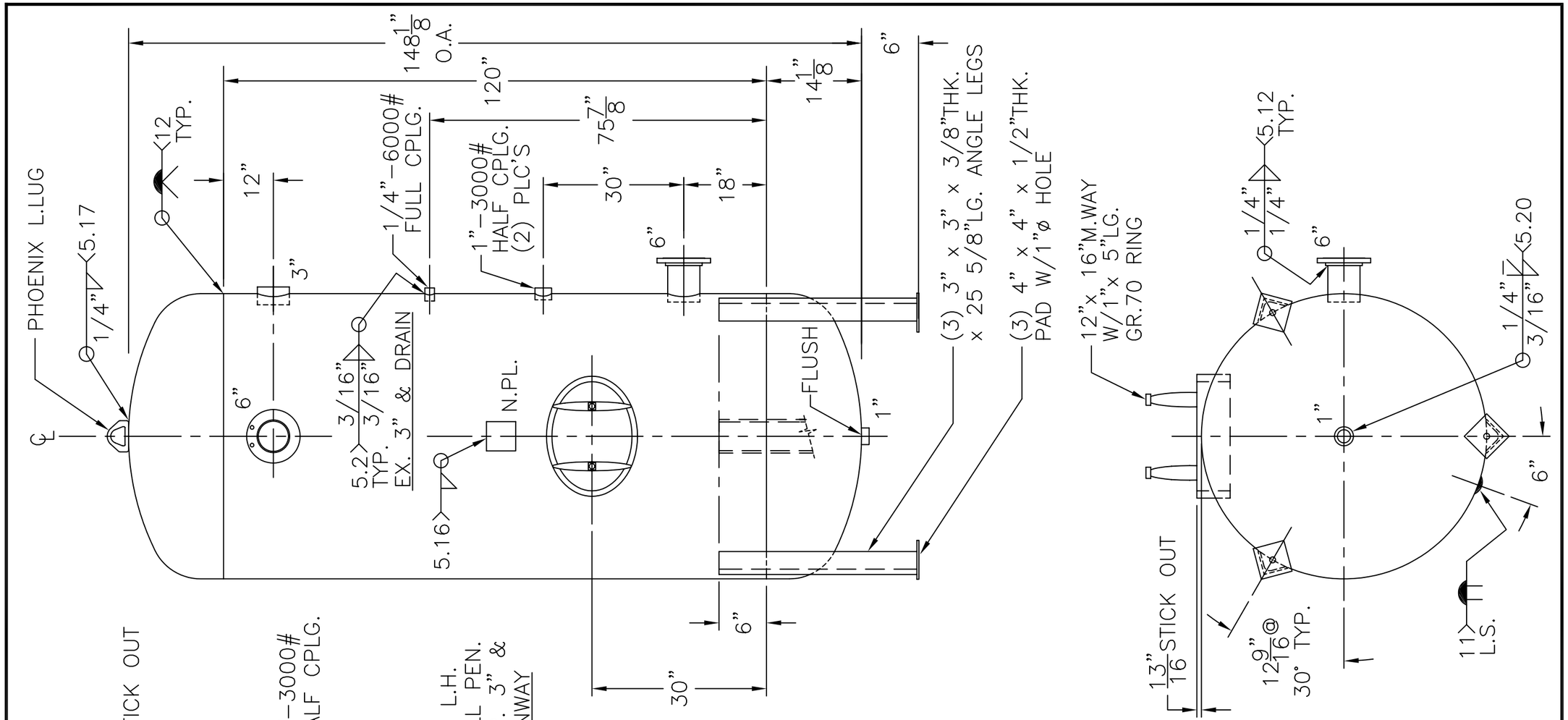

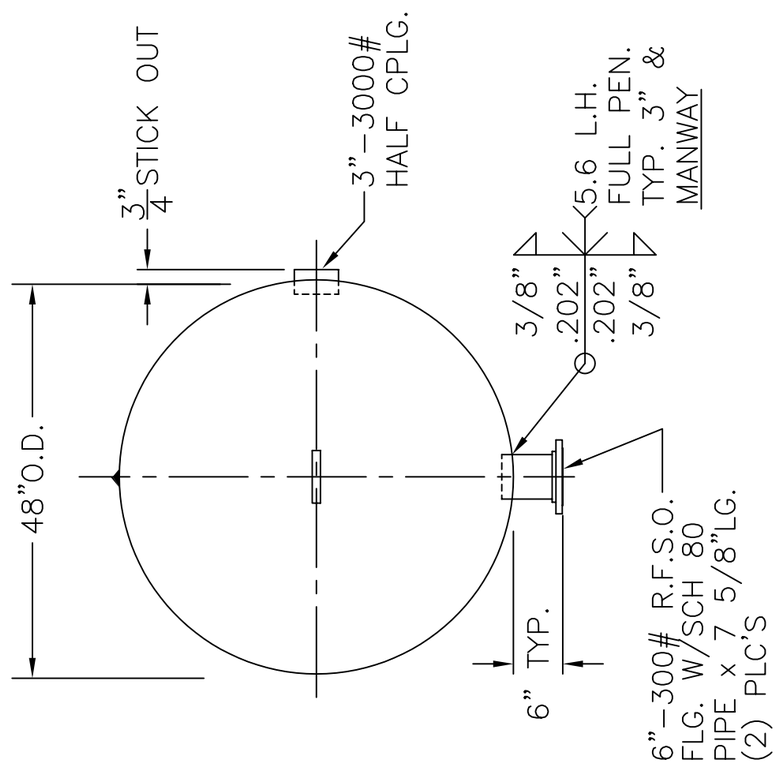

NOTE: 1) HYDRO @ 390 PSIG. MIN.
2) PRE HEAT WELDS TO 150°F

SHELL / HEADS	.375" SA-516-70 2:1 S.E.	
	(.356"MIN.)	
	.404" SA-455	
M.A.W.P.	300 PSIG. @ 400 °F	
M.D.M.T.	-20 °F @ 300 PSIG.	
ASME. SECTION VIII	DIV. 1, 2001 ADD 2002	
X-RAY:	RT-4 SPOT L.S. & HDS. G.S.	
GALLONS:	1060	WT. 3005 LBS.
SERIAL NO.		
N.B.		

48-VD-1060-L	REV: 12-6-02
	DATE: 8-20-92
FOR: HANSON STANDARD	
VERT. AIR TANK	
INSIDE: UNPAINTED	
OUTSIDE: PRIME	
BY: J.G.	

ROY E. HANSON JR. MFG.
1924 COMPTON AVE.
LOS ANGELES, CA 90011