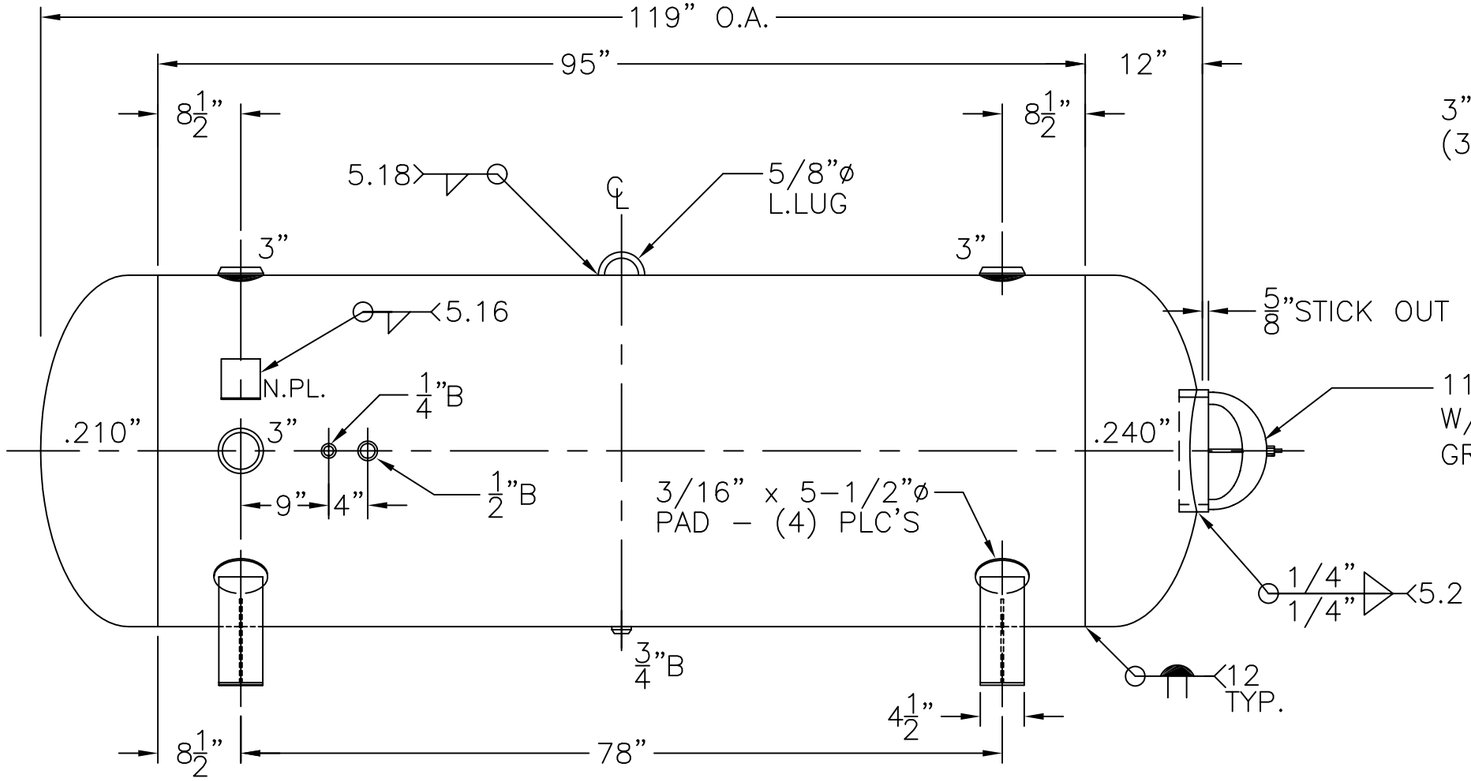

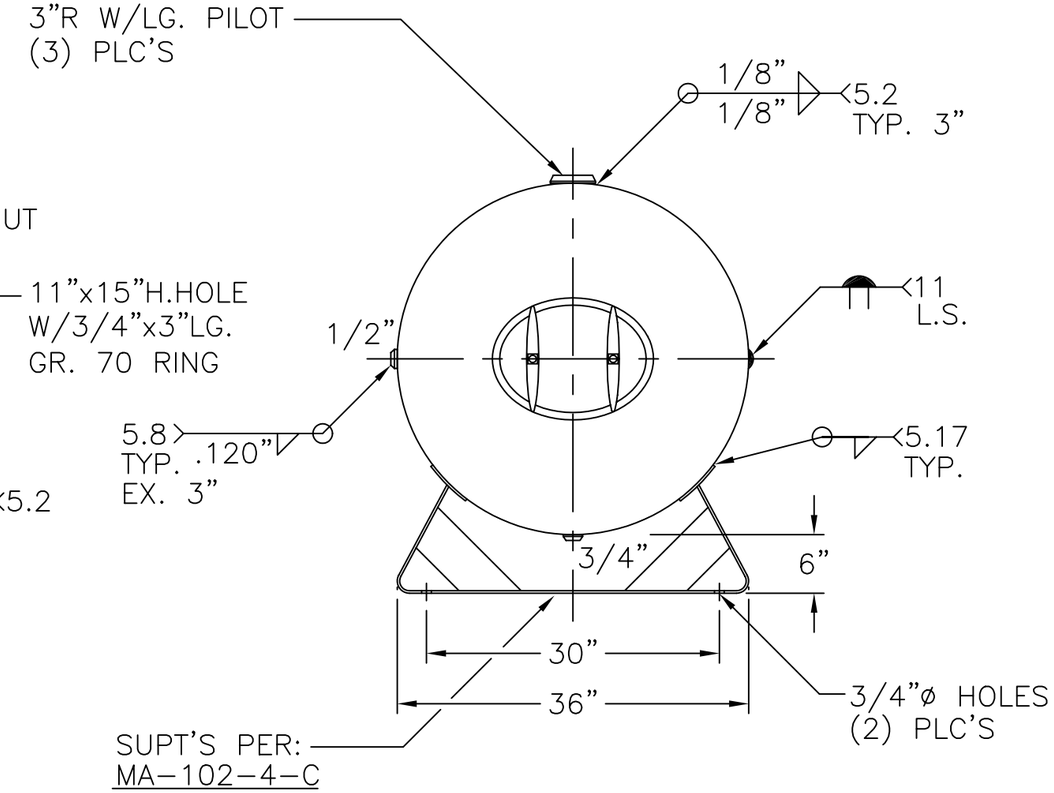

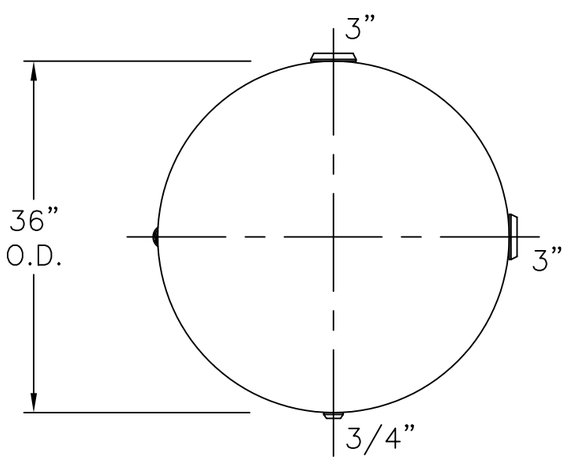

VIEW W/OUT TOP SUPT'S

NOTE: 1) HYDRO @ 260 PSIG. MIN.

SHELL / HEADS	LEFT–.210" SA–455 2:1 S.E.	0–36–HA–500–W	REV. 2–10–03
	JOGGLE – .209 OFFSET		DATE: 12–12–97
	RIGHT – .240" SA–455 2:1 S.E.	FOR: HANSON STANDARD	
	JOGGLE	HORIZ. AIR TANK	
	.218" SA–455	SURFACE AREA = 97.6 SQ. FT.	
		INSIDE: EPOXY LINED	
M.A.W.P. 200 PSIG. @ 200 °F			
M.D.M.T. –20 °F @ 200 PSIG.		OUTSIDE: PRIME	
ASME SECTION VIII DIV. 1, 2001 ADD 2002		CAD–"B" SIZE UNDER "STD"–SERIES	
X–RAY: RT–4 SPOT L.S. ONLY		BY: J.G.	SCALE: 3/4"=12"
GALLONS: 500	WT. 936 LBS.	ROY E. HANSON JR. MFG.	
SERIAL NO.		1924 COMPTON AVE. LOS ANGELES, CA 90011	