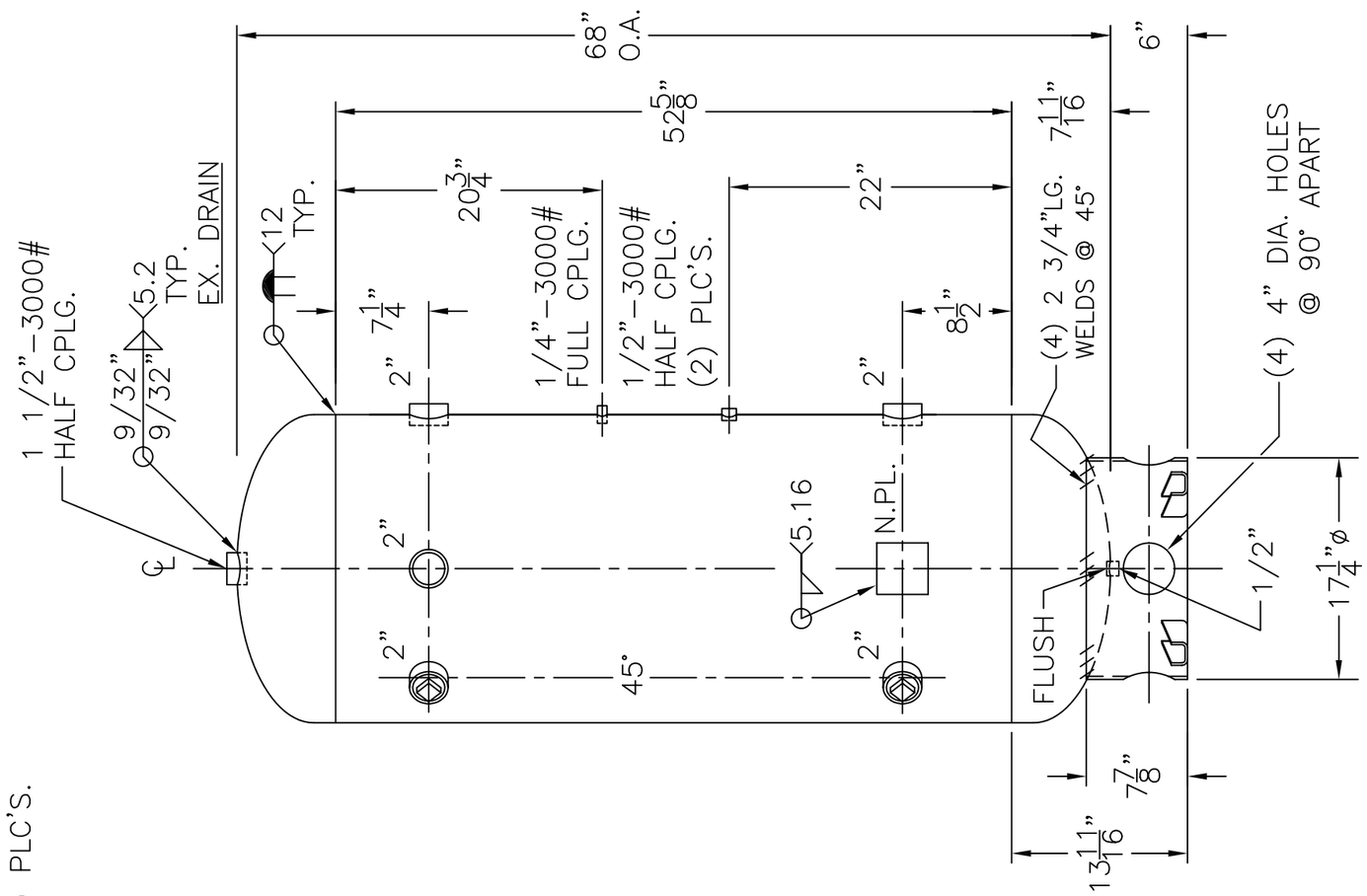

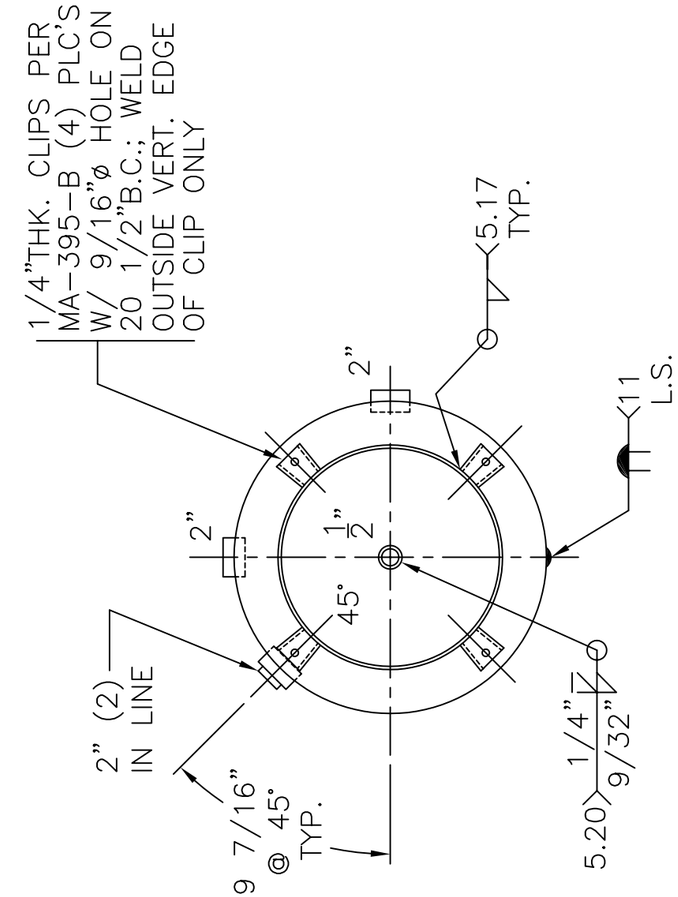

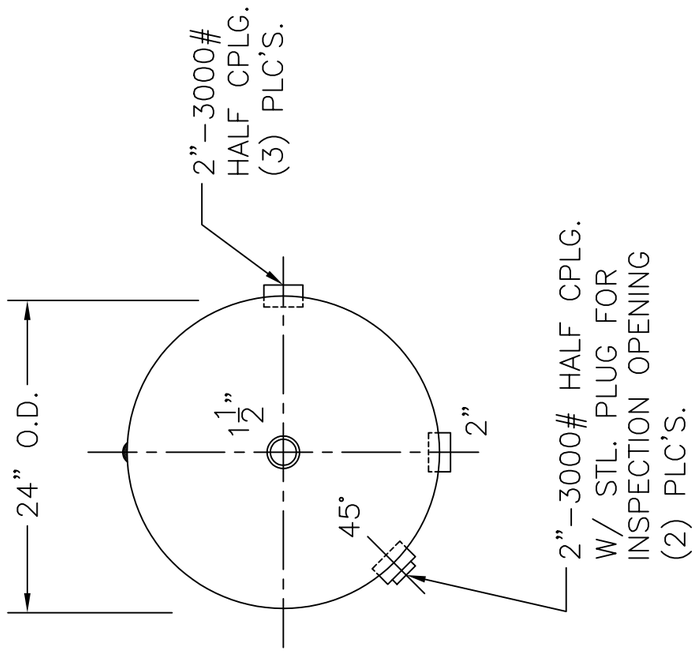

NOTE: 1) HYDRO @ 520 PSIG. MIN.

SHELL / HEADS	.280" SA-455 2:1 S.E.	24-VJ-120-R — REV. 4-11-03
	(.259" OFFSET)	DATE: 10-20-89
	JOGGLED	FOR: HANSON STANDARD
		VERT. AIR TANK
	.280" SA-455	
		INSIDE: UNPAINTED
M.A.W.P. 400 PSIG. @ 400 °F		
M.D.M.T. -20 °F @ 400 PSIG.		OUTSIDE: PRIME
ASME. SECTION VIII DIV. 1, 2001 ADD 2002		CAD "B" SIZE UNDER "STD"-SERIES
X-RAY: RT-4 SPOT L.S. NOT G.S.		BY: E.S. — SCALE: 1"=12"
GALLONS: 120	WT. 474 LBS.	ROY E. HANSON JR. MFG.
SERIAL NO.		1924 COMPTON AVE. LOS ANGELES, CA 90011
N.B.		