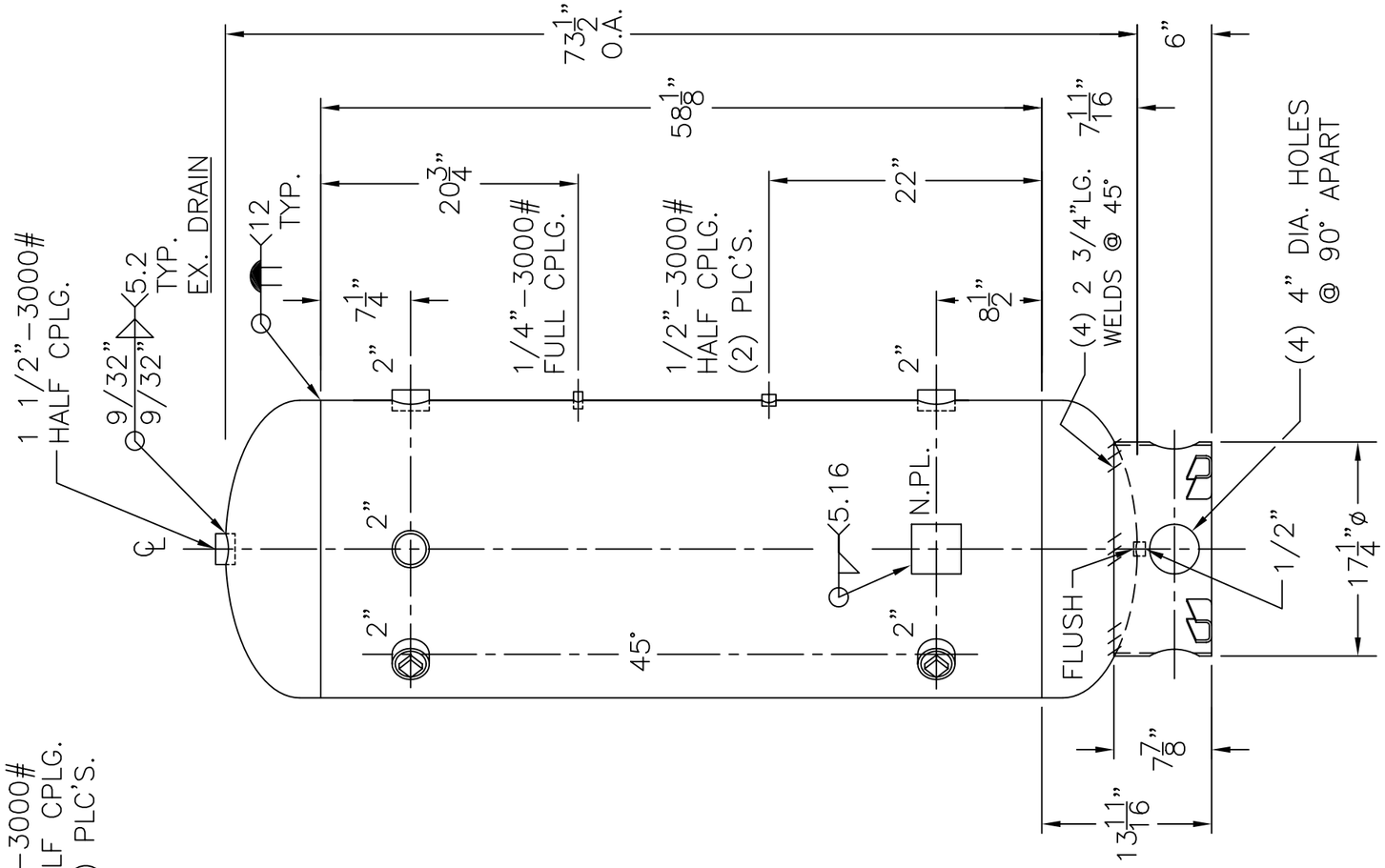

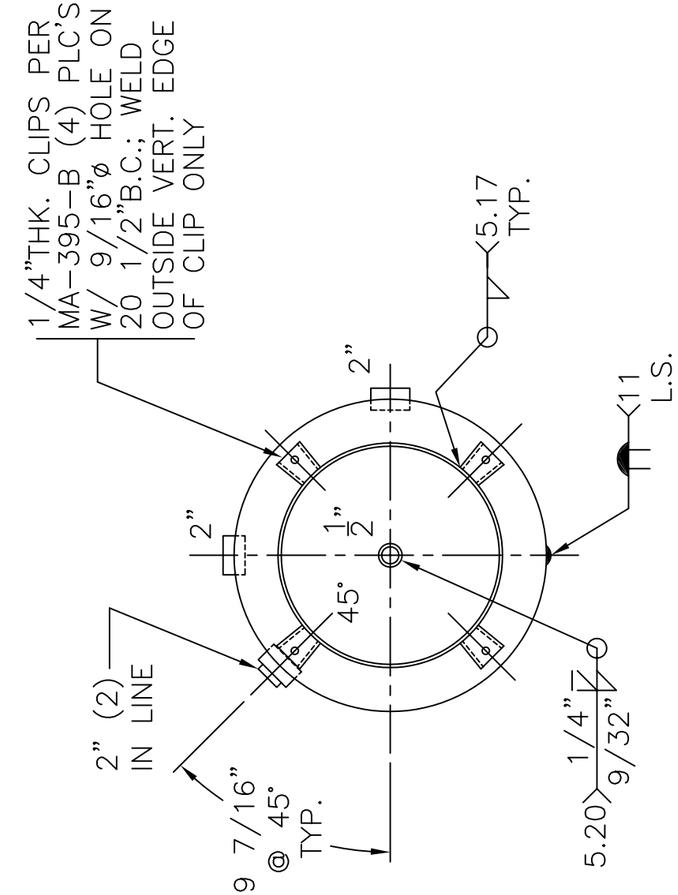

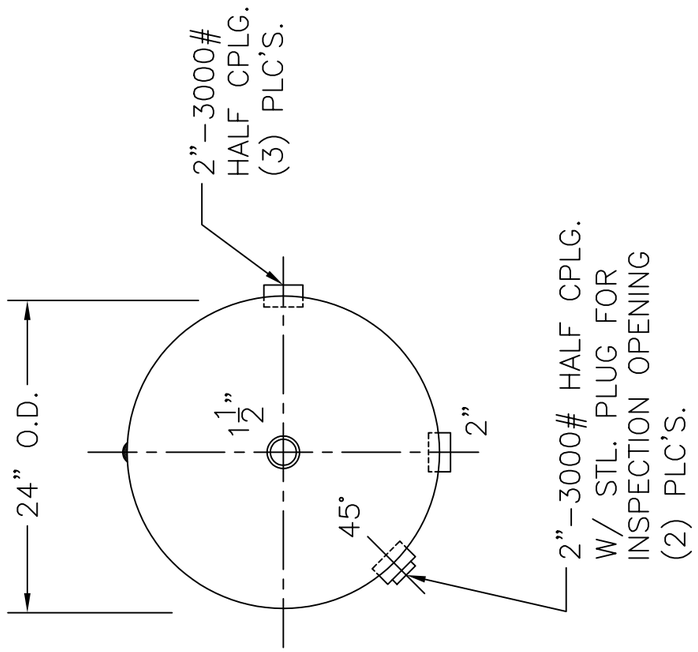

NOTE: 1) HYDRO @ 520 PSIG. MIN.

SHELL / HEADS	.280" SA-455 2:1 S.E.	24-VJ-130-R
	(.259" OFFSET)	REV. 4-11-03
	JOGGLED	DATE: 3-11-85
		FOR: HANSON STANDARD
	.280" SA-455	VERT. AIR TANK
		INSIDE: UNPAINTED
M.A.W.P. 400 PSIG. @ 400 °F		
M.D.M.T. -20 °F @ 400 PSIG.		OUTSIDE: PRIME
ASME. SECTION VIII DIV. 1, 2001 ADD 2002		CAD "B" SIZE UNDER "STD"-SERIES
X-RAY: RT-4 SPOT L.S. NOT G.S.		BY: E.S. SCALE: 1"=12"
GALLONS: 130	WT. 509 LBS.	ROY E. HANSON JR. MFG.
SERIAL NO.		1924 COMPTON AVE.
N.B.		LOS ANGELES, CA 90011