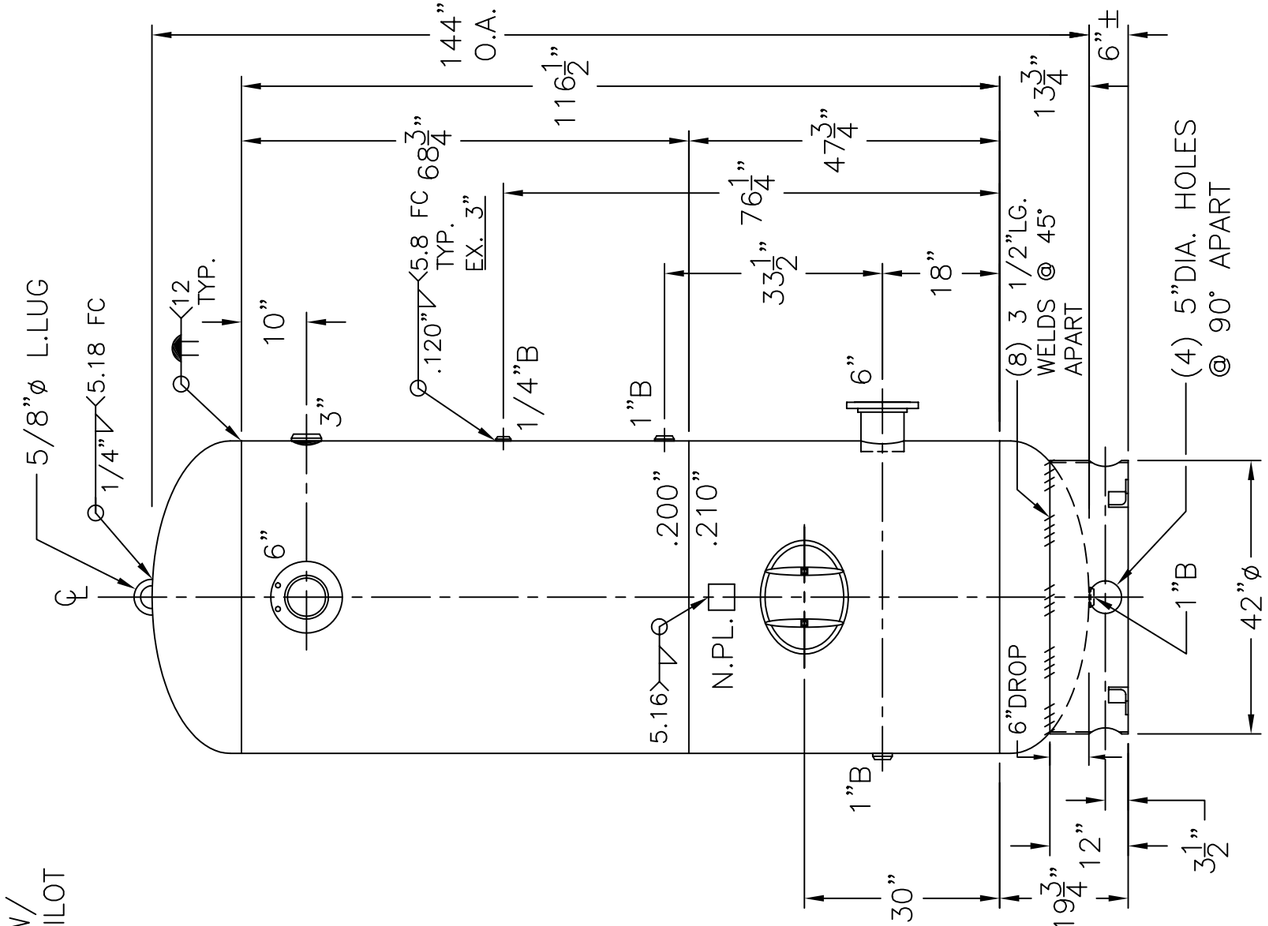

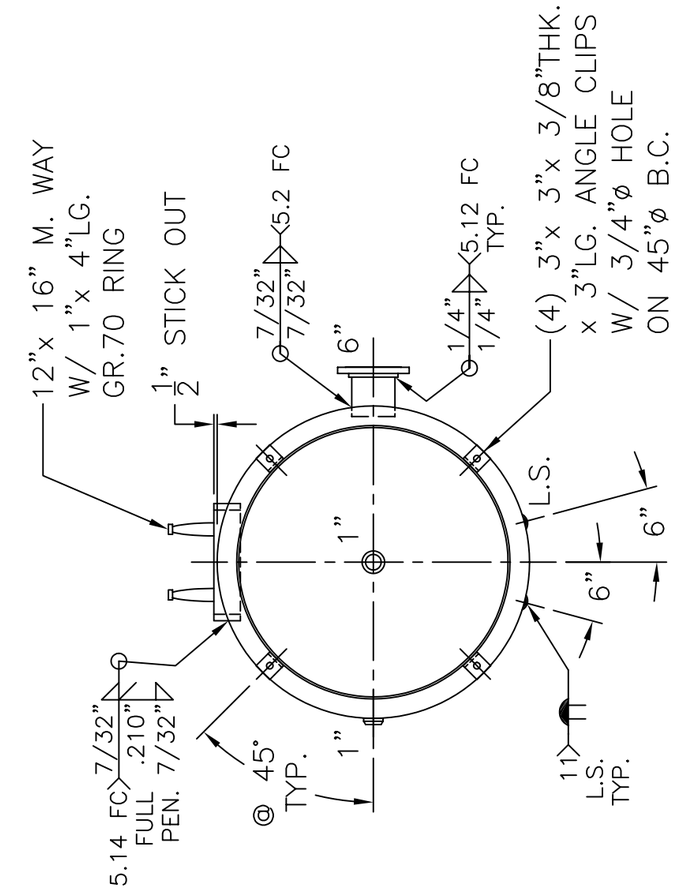

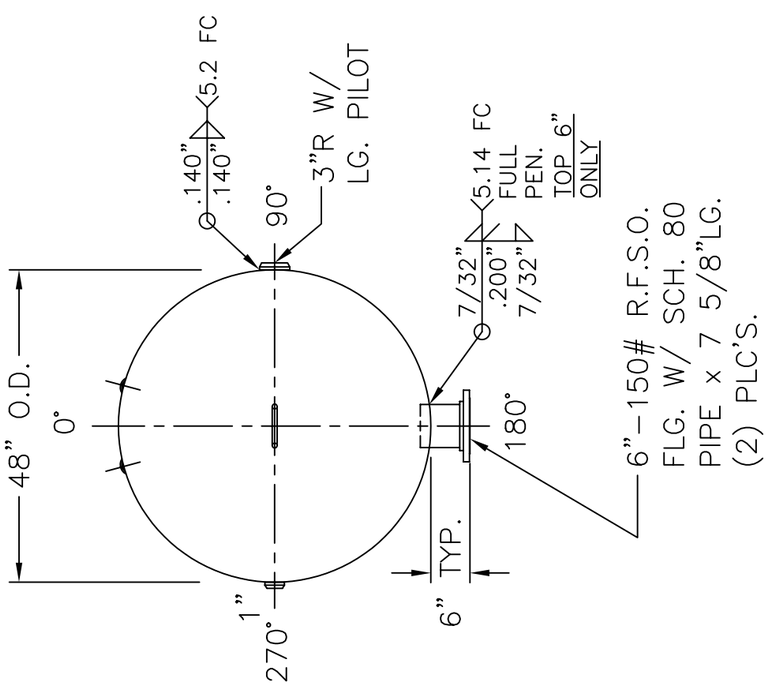

NOTE: 1) HYDRO @ 198 PSIG. MIN.
2) IMPACT TESTING NOT REQUIRED UG-20 (f).
3) DRAIN FOR HORIZONTAL MOUNT ADDED AFTER SERIAL #423,136

SHELL / HEADS	.245" SA-455 2:1 S.E.	48-VP-1060-R	REV. 12-18-06
	(.198"MIN.) JOGGLE		DATE: 6-9-99
	BOTH-.208" OFFSET-YELLOW STRIPE	FOR: HANSON STANDARD	
		VERT. AIR TANK	
	TOP. - .200" SA-455	ALBERTA & ONTARIO -	
	BTM. - .210" SA-455	CRN #M0378.52	
		INSIDE: UNPAINTED	
M.A.W.P. 150 PSIG. @ 400 °F			
M.D.M.T. -20 °F @ 150 PSIG.		OUTSIDE: PRIME	
ASME. SECTION VIII DIV. 1, 2004 ADD 2006		CAD "B" SIZE UNDER "STD"-SERIES	
X-RAY: RT-4 SPOT L.S.		BY: E.S.	SCALE: 1/2"=12"
GALLONS: 1060	WT. 1732 LBS.	ROY E. HANSON JR. MFG.	
SERIAL NO.		1600 E. WASHINGTON BLVD. LOS ANGELES, CA 90021	
N.B.			