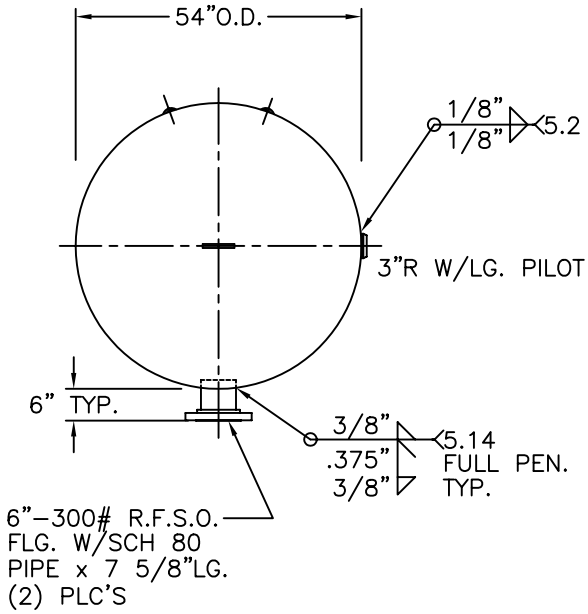

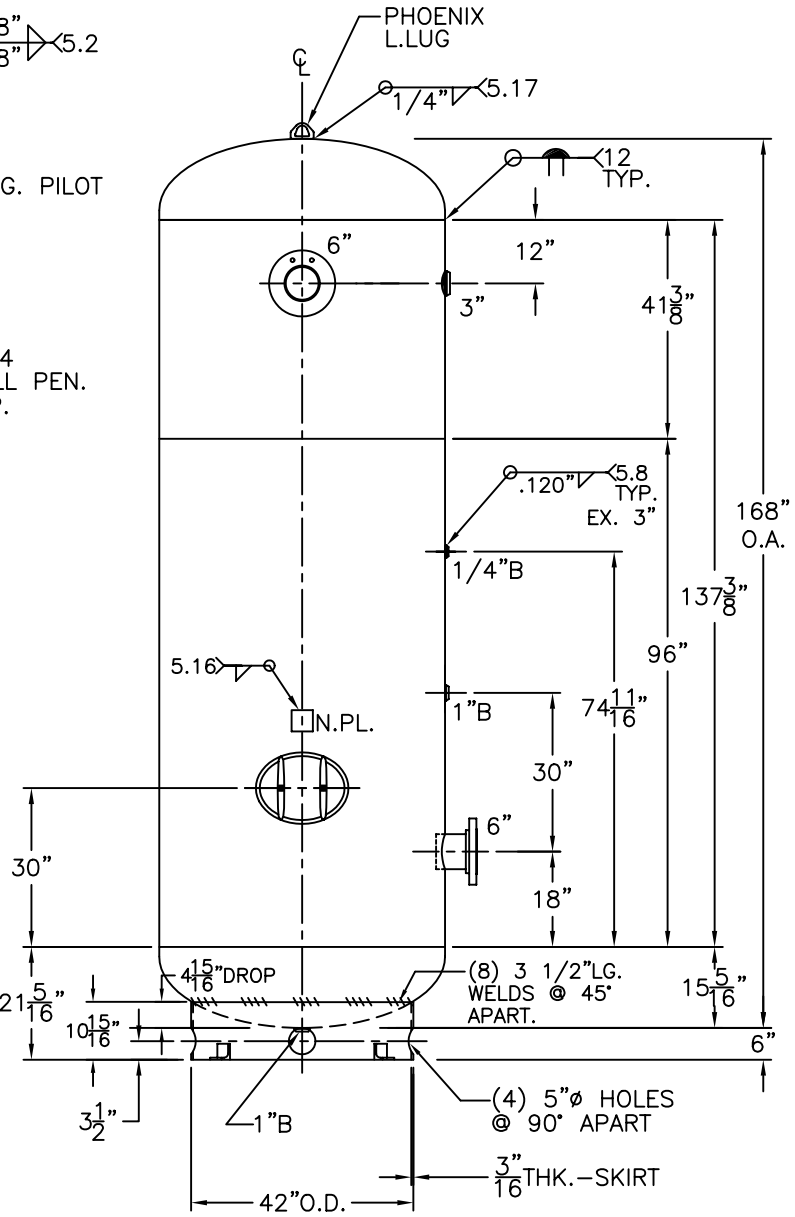

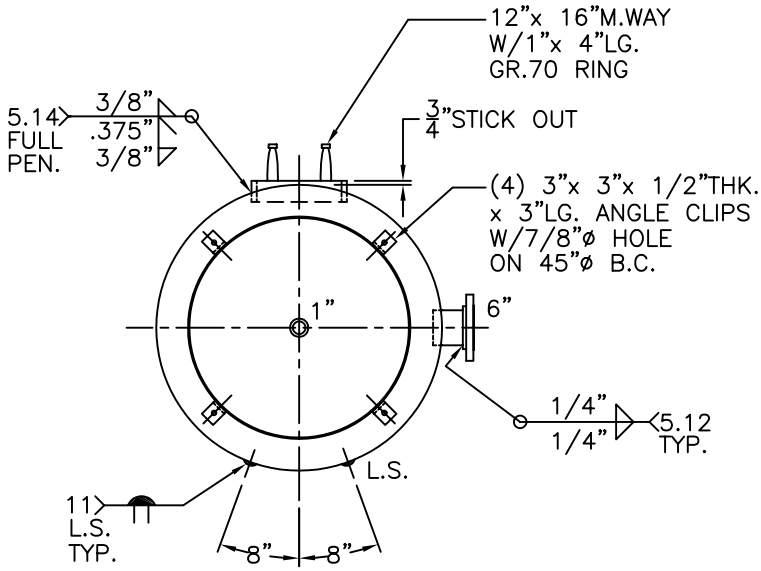

NOTE: 1) HYDRO @ 325 PSIG. MIN.

SHELL / HEADS	.375" SA-516-70 2:1 S.E. (.334" MIN.)
	.375" SA-455
M.A.W.P.	250 PSIG. @ 400 °F
M.D.M.T.	-20 °F @ 250 PSIG.
ASME. SECTION VIII DIV. 1, 2001 ADD 2002	
X-RAY: RT-4 SPOT L.S. & SPOT HDS. G.S.	
GALLONS: 1550	WT. 3603 LBS.
SERIAL NO.	
N.B.	

54-VC-1550-R	REV. 12-9-02
FOR: HANSON STANDARD VERT. AIR TANK	DATE: 6-9-99
INSIDE: UNPAINTED	
OUTSIDE: PRIME	
CAD "B" SIZE UNDER "STD"-SERIES	
BY: J.G.	SCALE:1/2"=12"

ROY E. HANSON JR. MFG.
1924 COMPTON AVE.
LOS ANGELES, CA 90011