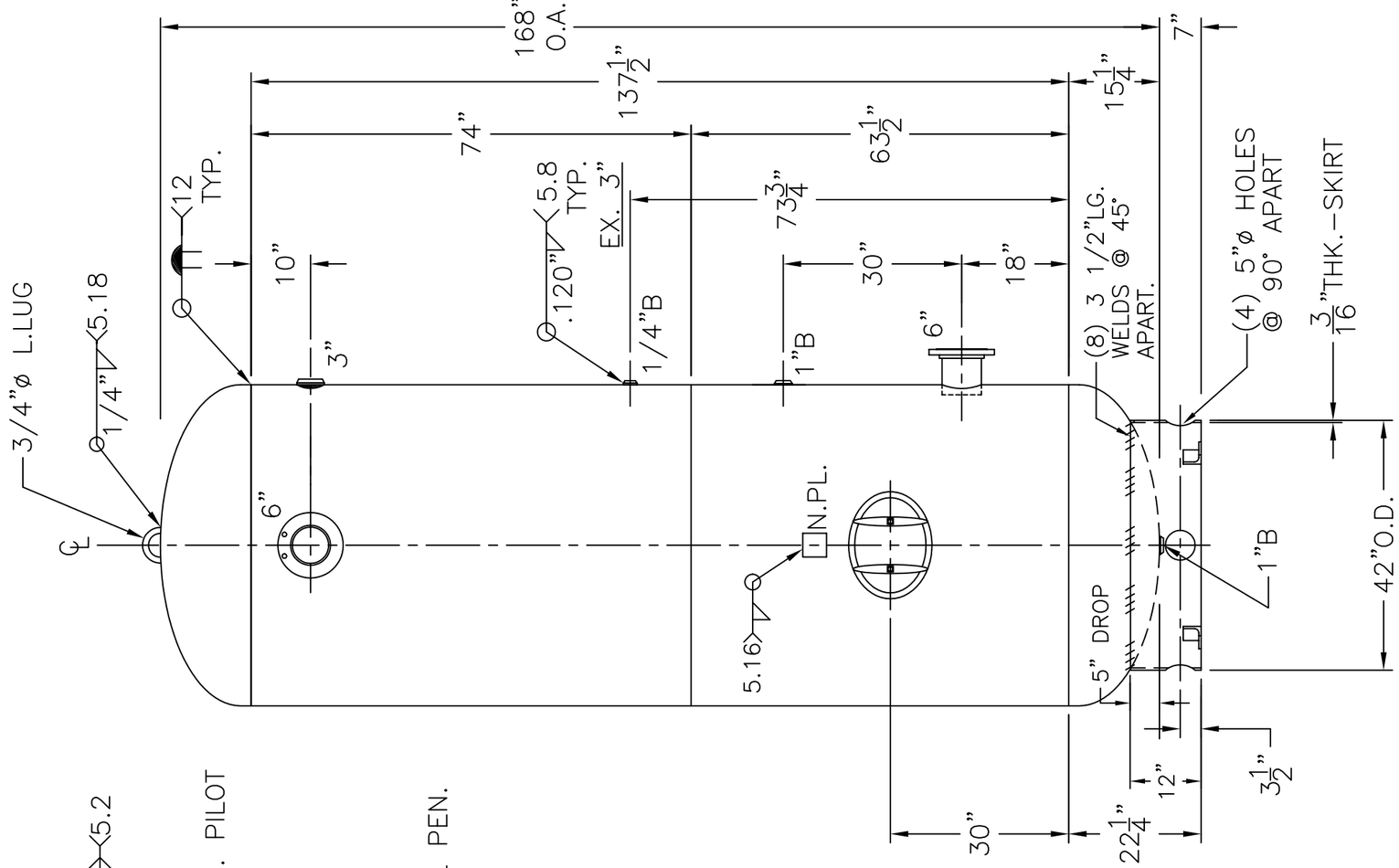

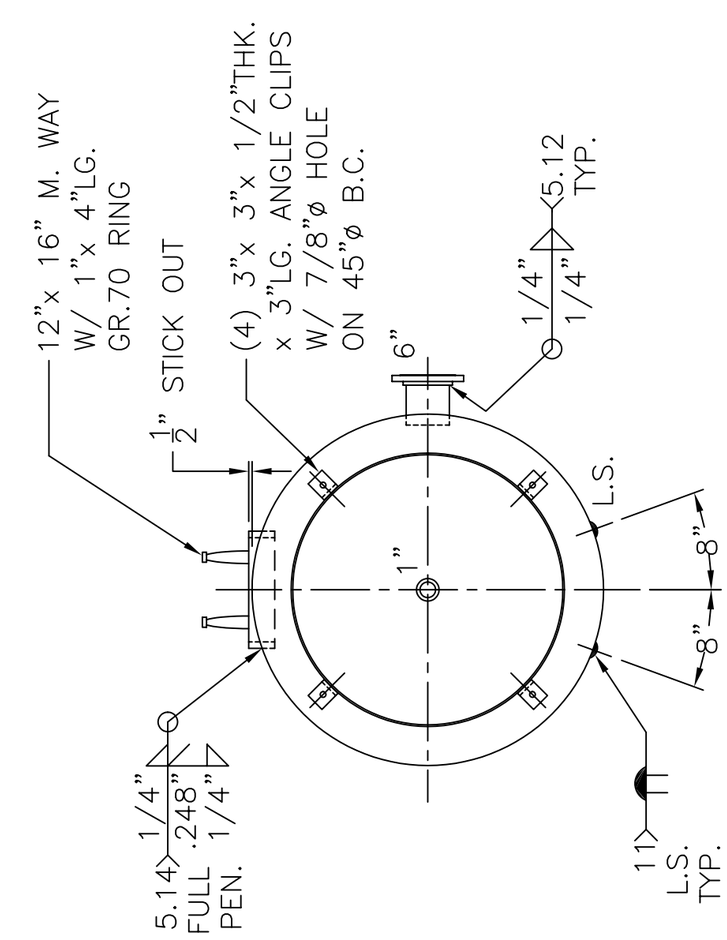

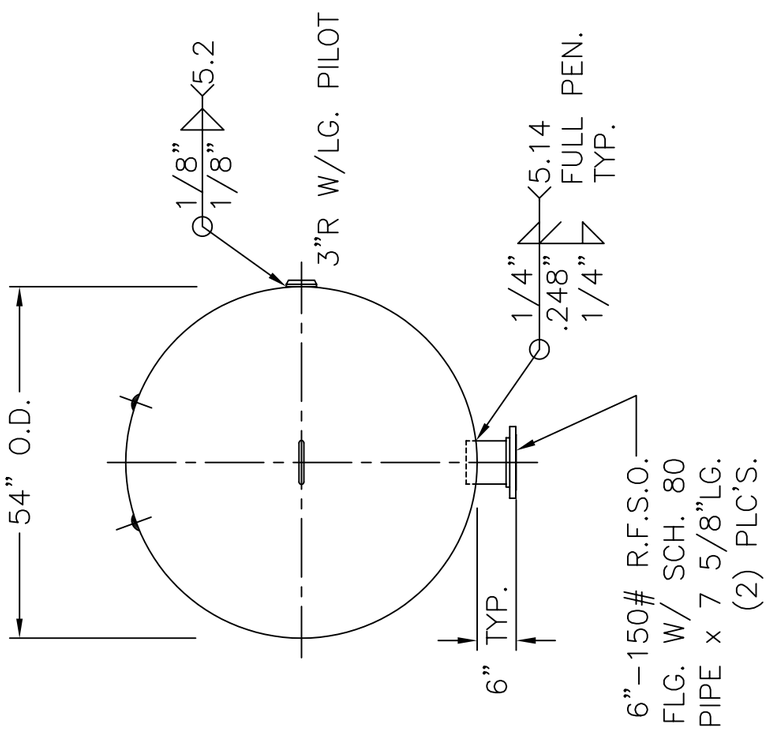

NOTE: 1) HYDRO @ 215 PSIG. MIN.

SHELL / HEADS	.250" SA–455 2:1 S.E.	54–VM–1550–R
	(.243" MIN.) JOGGLE	REV. 1–21–04
		DATE: 1–26–99
		FOR: HANSON STANDARD
		VERT. AIR TANK
	.248" SA–455	
		INSIDE: UNPAINTED
M.A.W.P. 165 PSIG. @ 400 °F		
M.D.M.T. –20 °F @ 165 PSIG.		OUTSIDE: PRIME
ASME. SECTION VIII DIV. 1, 2001 ADD 2003		CAD "B" SIZE UNDER "STD"–SERIES
X–RAY: RT–4 SPOT L.S. ONLY		BY: J.G. SCALE:1/2"=12"
GALLONS: 1550	WT. 2459 LBS.	ROY E. HANSON JR. MFG.
SERIAL NO.		1924 COMPTON AVE.
N.B.		LOS ANGELES, CA 90011